CARPINTERIA PROTOTYPE ACCESSORY DWELLING UNIT - PLAN 2

STREET ADDRESS (TO BE PROVIDED BY OWNER)

CITY OF CARPINTERIA, CA

USER LICENSE AGREEMENT

BY USING THESE PERMIT READY ACCESSORY DWELLING UNIT CONSTRUCTION DOCUMENTS, THE USER AGREES TO RELEASE, HOLD HARMLESS, AND INDEMNIFY THE CITY OF CARPINTERIA, ITS ELECTED OFFICIALS AND EMPLOYEES, RRM DESIGN GROUP, AND THE ARCHITECT OR ENGINEER WHO PREPARED THESE CONSTRUCTION DOCUMENTS FROM ANY AND ALL CLAIMS, LIABILITIES, SUITS AND DEMANDS ON ACCOUNT OF ANY INJURY, DAMAGE OR LOSS TO PERSONS OR PROPERTY, INCLUDING INJURY OR DEATH, OR ECONOMIC LOSSES, ARISING OUT OF THE USE OF THESE CONSTRUCTION DOCUMENTS.

THE PLANS ATTACHED HERE ARE APPROVED FOR ONLY USE IN THE CITY OF CARPINTERIA. NO DEVIATIONS, ALTERATIONS, OR OPTIONS BEYOND THOSE SPECIFICALLY INDICATED IN THE PLANS ARE ALLOWED WITHOUT PRIOR APPROVAL BY THE ISSUING JURISDICTION AND CHIEF BUILDING OFFICIAL. ANY UNAPPROVED PLAN MODIFICATIONS MAY BE DEVELOPED THROUGH RRM DESIGN GROUP AND THE APPROVING JURISDICTION IF REQUIRED.

These plans are only to be used within City of Carpinteria jurisdiction. By using these standard plans ("ADU Plans") in accordance with the City of Carpinteria's Pre-Approved ADU Construction Plans Program, the User agrees to defend, indemnify, and hold harmless the City of Carpinteria and RRM from any and all claims, liabilities, suits, and demands on account of any injury, damage, or loss to persons or property, including injury or death, or economic losses, arising out of the use of these ADU Plans. The use of these ADU Plans does not eliminate or reduce the user's responsibility to verify any and all information herein.

VICINITY MAP

*FOR PLANNING STAFF ONLY

INITIAL WHEN SECTION HAS BEEN REVIEWED. STAFF INITIALS: _____

PROVIDED BY OWNER:

SHEET INDEX

*FOR PLANNING STAFF ONLY

INITIAL WHEN SECTION HAS BEEN REVIEWED. STAFF INITIALS: _____

G-002	TITLE SHEET - PLAN 2
G-101	GENERAL NOTES
G-102	GENERAL NOTES
G-201	CAL GREEN REQUIREMENTS
G-202	CAL GREEN REQUIREMENTS
AS-101	ARCHITECTURAL SITE PLAN
A2-100	PERSPECTIVES
A2-101	FLOOR PLANS & FINISH PLANS
A2-111	MECHANICAL & ELECTRICAL PLANS
A2-121	ROOF PLANS & REFLECTED CEILING PLANS - CALIFORNIA RANCH
A2-122	ROOF PLANS & REFLECTED CEILING PLANS - COASTAL COTTAGE
A2-201	EXTERIOR ELEVATIONS & BUILDING SECTIONS - CALIFORNIA RANCH
A2-202	EXTERIOR ELEVATIONS & BUILDING SECTIONS - COASTAL COTTAGE
*STRIKETHROUGH SHEETS THAT ARE NOT APPLICABLE TO CHOSEN STYLE	
AD-901	ARCHITECTURAL DETAILS - COMMON
AD-902	ARCHITECTURAL DETAILS - COMMON
AD-903	ARCHITECTURAL DETAILS - CALIFORNIA RANCH
AD-904	ARCHITECTURAL DETAILS - COASTAL COTTAGE
*STRIKETHROUGH SHEETS THAT ARE NOT APPLICABLE TO CHOSEN STYLE	
S2-101	SHEET INDEX, ABBREVIATIONS & SYMBOLS
S2-102	GENERAL NOTES
S2-103	GENERAL NOTES, SPECIAL INSPECTION & TESTS
S2-201	FOUNDATION PLAN
S2-202	ROOF FRAMING PLAN
S2-301	TYPICAL CONCRETE DETAILS
S2-311	CONCRETE DETAILS
S2-401	TYPICAL WOOD DETAILS
S2-402	TYPICAL WOOD DETAILS
S2-403	TYPICAL WOOD DETAILS
S2-404	TYPICAL WOOD DETAILS
S2-421	ROOF FRAMING DETAILS
S2-422	ROOF FRAMING DETAILS
T24-201	CERTIFICATE OF COMPLIANCE - PLAN 2
T24-202	CERTIFICATE OF COMPLIANCE - PLAN 2
T24-203	CERTIFICATE OF COMPLIANCE - PLAN 2
Grand total: 33	

SUPPORTING DOCUMENTS

STRUCTURAL CALCULATIONS
- PREPARED BY: RRM DESIGN GROUP
- DATE PREPARED: 01/26/2023
- JOB NUMBER: 2277-01-C121

ENERGY COMPLIANCE
- PREPARED BY: _____
- DATE PREPARED: _____
- JOB NUMBER: _____

TRUSS CALCULATIONS
- PREPARED BY: _____
- DATE PREPARED: _____
- JOB NUMBER: _____

DEFERRED SUBMITTALS

1. ROOF TRUSS CALCULATIONS (REQUIRES REVIEW BY LICENSED STRUCTURAL ENGINEER)
2. FIRE SPRINKLER (YES / NO) (SEPARATE PLAN CHECK / PERMIT)
3. SOLAR PV (-KW) (SEPARATE PLAN CHECK / PERMIT)
4. GEOTECHNICAL REPORT (YES / NO) (SEPARATE PLAN CHECK / PERMIT)

PROJECT DIRECTORY

*FOR PLANNING STAFF ONLY

INITIAL WHEN SECTION HAS BEEN REVIEWED. STAFF INITIALS: _____

APPLICANT/OWNER
- ADDRESS:
- CONTACT:
- EMAIL:
- PHONE:

ARCHITECT (MODIFICATION TO PROTOTYPE) RRM DESIGN GROUP
- ADDRESS: 3765 S Higuera St, Suite 102, SAN LUIS OBISPO, CA 93401
- CONTACT: RANDALL RUSSOM
- EMAIL: RWRUSSOM@RRMDESIGN.COM
- PHONE: P:(805) 543-1794

ARCHITECT (MODIFICATION TO PROTOTYPE)
- ADDRESS:
- CONTACT:
- EMAIL:
- PHONE:

CIVIL ENGINEER RRM DESIGN GROUP
- ADDRESS:
- CONTACT:
- EMAIL:
- PHONE:

LANDSCAPE ARCHITECT
- ADDRESS:
- CONTACT:
- EMAIL:
- PHONE:

STRUCTURAL ENGINEER RRM DESIGN GROUP
- ADDRESS: 3765 S Higuera St, Suite 102, SAN LUIS OBISPO, CA 93401
- CONTACT: JESSICA MEADOWS
- EMAIL: JMMEADOWS@RRMDESIGN.COM
- PHONE: P:(805) 543-1794

MECHANICAL ENGINEER
- ADDRESS:
- CONTACT:
- EMAIL:
- PHONE:

ELECTRICAL ENGINEER
- ADDRESS:
- CONTACT:
- EMAIL:
- PHONE:

UTILITIES

UPON APPROVAL, PLEASE BE PREPAREED TO PROVIDE APPROVAL STAMPS FROM APPLICABLE AGENCIES, AS FOLLOWS, PRIOR TO ISSUANCE OF BUILDING PERMIT.

WATER AND SEWER SERVICE	CARPINTERIA SANITARY DISTRICT
ELECTRICAL SERVICE	SOUTHERN CALIFORNIA EDISON
GAS SERVICE	SO CAL GAS
FIRE PREVENTION	CARPINTERIA SUMMERLAND FIRE PREVENTION
GARBAGE SERVICE	E.J. HARRISON
TELEPHONE SERVICE	
CABLE SERVICE	COX CABLE

PROJECT INFORMATION

*FOR PLANNING STAFF ONLY

INITIAL WHEN SECTION HAS BEEN REVIEWED. STAFF INITIALS: _____

PROJECT SCOPE:
1. CONSTRUCTION OF A NEW DETACHED ONE STORY 480 SF ACCESSORY DWELLING UNIT WITH ONE BEDROOM AND ONE BATH.
2. ALL SITE WORK WITHIN THE PROPERTY LINE.
3. ALL THE WORK SHOWN IN THE DRAWINGS AND SPECIFICATIONS.

SITE INFORMATION: (TO BE PROVIDED BY CITY OF CARPINTERIA)
- STREET ADDRESS:
- APN:
- ZONING:
- LOT SIZE:
- LAND USE:
- EXISTING USE:
- PROPOSED USE:

FLOOR AREA RATIO (TO BE PROVIDED BY CITY OF CARPINTERIA)
- MAXIMUM FAR:
- PROPOSED FAR:

LOT COVERAGE (TO BE PROVIDED BY OWNER)
- BUILDING:
- HARDSACPE/PAVING:
- LANDSCAPE:

SETBACKS (TO BE PROVIDED BY CITY OF CARPINTERIA)

	REQUIRED	*PROPOSED*
FRONT:		
REAR:		
SIDES:		

BUILDING INFORMATION:

NUMBER OF STORIES:	1
OCCUPANCY GROUP:	R-3
CONSTRUCTION TYPE:	VB
SPRINKLERED:	SEE FIRE SPRINKLER SECTION ON SHEET
MAX. HEIGHT ALLOWED: (PER 2022 CBC TABLE 504.3)	16'-0"
MAX. HEIGHT ALLOWED: (PER CITY OF CARPINTERIA)	16'-0"
MAX. HEIGHT PROPOSED:	
ROOF RATING:	CLASS A
HIGH FIRE ZONE:	REFER TO 'WILDLAND-URBAN INTERFACE FIRE AREA' AND 'VERY-HIGH FIRE SEVERITY ZONE' SECTIONS ON SHEET

BUILDING AREAS

AREAS - PLAN 2	
PLAN 2	480 SF

PROJECT CHECKLIST

*FOR PLANNING STAFF ONLY

INITIAL WHEN SECTION HAS BEEN REVIEWED. STAFF INITIALS: _____

STYLE SELECTION
- ◯ CAL RANCH
  - *STRIKE THROUGH SHEETS A1-122 & A2-202 & AD-904
- ◯ COASTAL COTTAGE
  - *STRIKE THROUGH SHEETS A1-121 & A1-201 & AD-903

WASTE WATER
- ◯ SEWER
- ◯ SEPTIC (REQUIRES APPROVAL)

FIRE SPRINKLERS

DOES THE PRIMARY RESIDNENCE HAVE NFPA 13D SPRINKLERS?

- ◯ **NO**
- ◯ **YES**

REQUIRED AT PROPOSED ADU:

- ◯ **NO** (NOT REQUIRED IF THE PRIMARY RESIDENCE IS UNSPRINKLERED
- ◯ **YES** (REQUIRED IF THE PRIMARY RESIDENCE IS SPRINKLERED

FIRE SPRINKLERS NOTES

1. IF FIRE SPRINKLERS ARE REQUIRED AT PROPOSED ADU THEN THE FOLLOWING NOTES APPLY.
2. AUTOMATIC FIRE SPRINKLER SYSTEM - AN AUTOMATIC FIRE SPRINKLER SYSTEM SHALL BE INSTALLED AS PER NFPA 13D THE MOST CURRENT EDITION. DETAILED SPRINKLER PLANS SHALL BE SUBMITTED TO THE FIRE PREVENTION BUREAU AND APPROVED PRIOR TO INSTALLATION. PLANS AND INSTALLATION MUST BE BY A C16 LICENSED SPRINKLER CONTRACTOR.
3. **SECTION 903.2.1 GROUP R** AN AUTOMATIC SPRINKLER SYSTEM INSTALLED IN ACCORDANCE WITH SECTION 9033 SHALL BE PROVIDED THROUGHOUT ALL BUILDINGS WITH A GROUP R FIRE AREA. THIS INCLUDES SINGLE FAMILY DWELLINGS, MULTI-FAMILY DWELLINGS AND ALL RESIDENTIAL CARE FACILITIES REGARDLESS OF OCCUPANT LOAD.
4. **SECTION 903.2.1.1** ADDITIONS AN AUTOMATIC SPRINKLER SYSTEM INSTALLED IN ACCORDANCE WITH 903.3 MAY BE REQUIRED TO BE INSTALLED THROUGHOUT STRUCTURES WHEN THE ADDITION IS MORE THAN 50% OF THE EXISTING BUILDING OR WHEN THE ALTERED BUILDING WILL EXCEED A FIRE FLOW OF 1,500 GALLONS PER MINUTE AS CALCULATED PER SECTION 507.3. THE FIRE CODE OFFICIAL MAY REQUIRE AN AUTOMATIC SPRINKLER SYSTEM BE INSTALLED IN BUILDINGS WHERE NO WATER MAIN EXISTS TO PROVIDE THE REQUIRED FIRE FLOW OR WHERE A SPECIAL HAZARD EXISTS SUCH AS: POOR ACCESS ROADS, GRADE, BLUFFS AND CANYON RIMS, HAZARDOUS BRUSH AND RESPONSE TIMES GREATER THAN 5 MINUTES BY A FIRE DEPARTMENT.
5. **SECTION 903.2.1.2** REMODELS OR RECONSTRUCTION AN AUTOMATIC SPRINKLER SYSTEM INSTALLED IN ACCORDANCE WITH SECTION 903.3 MAY BE REQUIRED IF THE SCOPE OF WORK INCLUDES SIGNIFICANT MODIFICATION TO THE INTERIOR AND/OR ROOF OF THE BUILDING, AND THE COST OF THE INSTALLATION DOES NOT EXCEED 15 PERCENT OF THE CONSTRUCTION COSTS OF THE REMODEL.
6. LOCATION AND SIZE OF WATER SERVICE UNDERGROUND SHALL BE INSTALLED AS SHOWN ON APPROVED FIRE SPRINKLER PLANS. A MINIMUM 1 INCH WATER SHALL BE INSTALLED.
7. A FIRE UNDERGROUND FLUSH CERTIFICATION SHALL BE REQUIRED AT FINAL INSPECTION.
8. A HYDRO INSPECTION OF THE FIRE SPRINKLER SYSTEM IS REQUIRED PRIOR TO FRAME INSPECTION. ONLY THE NEW PIPING SHALL BE TESTED.

ONSITE PARKING REQUIRED
- ◯ NONE
  - EXCEPTION USED:
  - ☐ STUDIO UNIT, NO PARKING REQUIRED.
  - ◯ THE ADU IS LOCATED WITHIN 1/2 MILE OF PUBLIC TRANSIT.
  - ◯ THE ADU IS LOCATED WITHIN A ARCHITECTURALLY AND HISTORICALLY SIGNIFICANT STRUCTURE.
  - ◯ OFF STREET PARKING PERMITS ARE REQUIRED BUT NOT OFFERED TO THE OCCUPANT OF THE ADU.
  - ◯ WHEN THERE IS A CAR SHARE VEHICLE LOCATED WITHING ONE BLOCK OF THE ADU.
- ◯ ONE PARKING SPACE (1-BEDROOM ADU)
- ☐ TWO PARKING SPACES (2-BEDROOM ADU)

REQUIRED FIRE RATED DETAILS
- ☐ ROOF EAVE DETAIL (33/A1-902 &)
- ☐ WALL FINISH DETAIL ( )
- ☐ WINDOW NOTES ( )

FIRE RATED DETAILS BOVE ARE TO BE USED WHEN WALLS ARE LESS THAN 10 FEET FROM A PROPERTY LINE, WHEN ROOF EAVES ARE LESS THAN 5 FEET FROM PROPERTY LINES, AND WHEN THE PROJECT IS LOCATED WITHIN THE VERY HIGH FIRE HAZARD SEVERITY ZONE. STRUCTURES SHALL COMPLY WITH THE CURRENT CBC CHAPTER 7A.

VERY HIGH FIRE SEVERITY ZONE
- ◯ NO
- ◯ YES

1. IF THE PROPERTY THAT WILL CONTAIN THE ADU IS IN THE VERY HIGH FIRE HAZARD SEVERITY ZONE SEE NOTES BELOW
2. AN ADU IN THE VERY HIGH FIRE SEVERITY ZONE SHALL COMPLY WITH CHAPTER 7A OF THE CURRENT CALIFORNIA BUILDING CODE.
3. STRUCTURES IN THE VERY HIGH FIRE HAZARD SEVERITY ZONE SHALL PROVIDE & MAINTAIN A FUEL MODIFICATION ZONE. FUEL MODIFICATION ZONES: THE APPLICANT SHALL PROVIDE & MAINTAIN FIRE/FUEL BREAKS TO THE SATISFACTION OF THE LOCAL FIRE DEPARTMENT. FIRE/FUEL BREAKS SHALL BE SHOWN ON THE GRADING, MAP, AND BUILDING PLANS.

EXTERIOR WALL MATERIAL
- ☐ CEMENT PLASTER STUCCO
- ☐ FIBER CEMENT - BOARD AND BATTEN SIDING
- ☐ FIBER CEMENT - LAP SIDING
- ☐ FIBER CEMENT - SHINGLE SIDING

WINDOW MATERIAL
- ◯ VINYL
- ◯ FIBERGLASS
- ◯ WOOD
- ◯ ALUMINUM CLAD WOOD

ROOF MATERIAL
- ◯ COMPOSITION SHINGLES
- ◯ STANDING SEAM METAL ROOF
- ◯ CLAY ROOF TILES

CARPINTERIA ADU PROTOTYPES

SANTA BARBARA COUNTY, CA

TITLE SHEET - PLAN 2

DATE
0218/23

SHEET
G-002

5/11/2023 4:50:45 PM
C:\Users\mjenkins\OneDrive - RRM Design Group\Documents\2727-01 Carpinteria ADU_Public Set_mjenkins.rvt

FLOOR PLAN NOTES

1. **WATER HEATER** (REFER TO BUILDING ENERGY ANALYSIS REPORT):
   a. ALL DOMESTIC HOT WATER PIPING SHALL BE INSULATED. *(2022 CPC 609.12.1)*
      - PIPES UP TO 2 INCHES IN DIAMETER: INSULATION WALL THICKNESS NOT LESS THAN DIAMETER OF PIPE. *(2022 CPC 609.12.2)*
      - PIPES GREATER THAN 2 INCHES IN DIAMETER: INSULATION WALL THICKNESS NOT LESS THAN 2 INCHES. *(2022 CPC 609.12.2)*

      EXCEPTIONS:
      1. PIPING THAT PENETRATES FRAMING MEMBERS SHALL NOT BE REQUIRED TO HAVE PIPE INSULATION FOR THE DISTANCE OF THE FRAMING PENETRATION. *(2022 CPC 609.12.2)*
      2. HOT WATER PIPING BETWEEN THE FIXTURE CONTROL VALVE OR SUPPLY STOP AND THE FIXTURE OR APPLIANCE SHALL NOT BE REQUIRED TO BE INSULATED. *(2022 CPC 609.12.2)*

   a. PROVIDE A TEMPERATURE AND PRESSURE RELIEF VALVE WITH A FULL SIZE DRAIN OF GALVANIZED STEEL OR HARD DRAWN COPPER TO THE OUTSIDE OF THE BUILDING WITH THE END OF THE PIPE PROTRUDING 6" MINIMUM @ 2' MAX. ABOVE GRADE POINTING DOWNWARD TO THE TERMINATION - UNTHREADED.
   b. COMBUSTION AIR PER MANUFACTURE REQUIREMENTS.
   c. CLEARANCES PER MANUFACTURE REQUIREMENTS.
1. **INSULATION FOR PIPING AND TANKS** (2022 CEC 105.0(j)):
   A. WATER PIPING, SOLAR WATER-HEATING SYSTEM PIPING, AND SPACE-CONDITIONING SYSTEM LINE INSULATION THICKNESS AND CONDUCTIVITY. PIPING SHALL BE INSULATED AS FOLLOWS:
      a. DOMESTIC HOT WATER PIPING, SEE NOTES ABOVE.
      b. PIPING FOR SPACE-CONDITIONING SYSTMES, SOLAR WATERHEATER SYSTEM COLLECTOR LOOP, SEE 2022 CEC SECTION 120.3(c).

      EXCEPTION:
      1. PIPING SURROUNDED WITH A MINIMUM OF 1 INCH OF WALL INSULATION, 2 INCHES OF CRAWLSPACE INSULATION, OR 4 INCHES OF ATTIC INSULATION SHALL NOT BE REQUIRED TO HAVE PIPE INSULATION.

   A. I**NSULATION PROTECTION**. PIPE INSULATION SHALL BE PROTECTED FROM DAMAGE DUE TO SUNLIGHT, MOISTURE, EQUIPMENT MAINTENANCE AND WIND. PROTECTION SHALL, AT MINIMUM, INCLUDE THE FOLLOWING (2022 CEC SECTION 120.3(B)):
      a. PIPE INSULATION EXPOSED TO WEATHER SHALL BE PROTECTED BY A COVER SUITABLE FOR OUTDOOR SERVICE. THE COVER SHALL BE WATER RETARDANT AND PROVIDES SHIELDING FROM SOLAR RADIATION THAT CAN CAUSE DEGRADATION OF THE MATERIAL. ADHESIVE TAPE SHALL NOT BE USED TO PROVIDE THIS PROTECTION.
      b. PIPE INSULATION COVERING CHILLED WATER PIPING AND REFRIGERANT SUCTION PIPING LOCATED OUTSIDE THE CONDITIONED SPACE SHALL INCLUDE, OR BE PROTECTED BY, A CLASS I OR CLASS II VAPOR RETARDER. ALL PENETRATIONS AND JOINTS SHALL BE SEALED.
      c. PIPE INSULATION BURIED BELOW GRADE MUST BE INSTALLED IN A WATER PROOF AND NONCRUSHABLE CASING OR SLEEVE.
1. **WEATHER BARRIERS.**
   A. NOT FEWER THAN ONE-LAYER WATER-RESISTIVE BARRIER SHALL BE APPLIED OVER STUDS OR SHEATHING OF ALL EXTERIOR WALLS CONTINUOUS FROM TOP OF WALS AND TERMINATED AT PENETRATIONS AND BUILDING APPENDAGES WITH FLASHING. MINIMUM NO. 15 FELT COMPLYING WITH ASTM D226, TYPE 1.
   B. PROVIDE (2) LAYERS OF GRADE D PAPER OR EQUAL WHEN PLASTER IS INSTALLED OVER WOOD BASED SHEATHING. *(2022 CRC R703.7.3)*
2. **DOMESTIC RANGE** VENTILATION DUCTS SHALL HAVE SMOOTH INTERIOR SURFACES. (2022 CMC 504.3)
3. **CLOTHES DRYER** MOISTURE EXHAUST DUCTS SHALL TERMINATE OUTSIDE THE BUILDING AND HAVE A BACK-DRAFT DAMPER. EXHAUST DUCT IS LIMITED TO 14'-0" W/ TWO ELBOWS. THIS SHALL BE REDUCED 2'-0" FOR EVERY ELBOW IN EXCESS OF TWO. MIN. DIA. 4", SMOOTH, METAL DUCT.*(2022 CMC 504.4)*
4. **ALL MANUFACTURED EQUIPMENT** SHALL BE INSTALLED AS PER MANUFACTURER'S SPECIFICATION AND DIMENSIONS VERIFIED WITH INSTALLATION REQUIREMENTS. ALL MANUFACTURER'S INSTALLATION INSTRUCTIONS SHOULD BE ON SITE FOR INSPECTIONS.
5. **SHOWERS AND TUB-SHOWER COMBINATIONS:** CONTROL VALVES MUST BE PRESSURE BALANCED OR THERMOSTATIC MIXING VALVES. *(2022 CPC 417.0.)*
6. **WET-ROOM GLAZING.** PROVIDE TEMPERED GLAZING IN DOORS AND ENCLOSURES FOR SHOWERS, BATHTUBS, SAUNAS, STEAM ROOMS, HOT TUBS & SIMILAR USES WHERE THE BOTTOM EXPOSED EDGE IS LESS THAN 60-INCHES ABOVE A STANDING SURFACE. *(2022 CRC R308.4.5)*
7. **HEATING AND AIR-CONDITIONING SYSTEM DESIGN** SHALL CONFORM TO CALGREEN SEC. 4.507, ENVIRONMENTAL COMFORT.
8. **WATER CLOSETS.**
   a. CLEARANCES: 24" MIN. FRONT, 30" MIN COMPARTMENT WIDTH.
   b. PROVIDE A MIN 3 SF WINDOW, 1/2 OF WHICH SHALL BE OPENABLE OR AN EXHAUST FAN 50 CFM FOR INTERMITTENT OR 20 CFM FOR CONTINUOUS. DIRECT VENT TO OUTSIDE WITH BACKDRAFT DAMPER. *(2022 CRC R303.3)*
   c. NEW WATER CLOSETS AND ASSOCIATED FLUSHOMETER VALVES, IF ANY SHALL USE NO MORE THAN 1.28 GALLONS PER FLUSH AND SHALL MEET PERFORMANCE STANDARDS ESTABLISHED BY THE AMERICAN SOCIETY OF MECHANICAL ENGINEERS STANDARD A112.19.2. H & S CODE, SECTION 17921.3(B).
9. **BATH ACCESSORIES:** PROVIDE MINIMUM 1 TOILET PAPER HOLDER AND 1 TOWEL BAR PER BATHROOM. PROVIDE NECESSARY BLOCKNG FOR TOILET PAPER HOLDER AND TOWEL BARS.
10. **WHOLE-BUILDING MECHANICAL VENTILATION SYSTE**M PER ASHRAE STANDARD 62.2. PROVIDE THE COUNTY INSPECTOR THE FOLLOWING INFORMATION AT OR BEFORE THE TIME OF INSPECTION:
    a. CALCULATIONS FOR REQUIRED VENTING RATES.
    b. CALCULATION ADJUSTMENTS FOR INTERMITTENT SYSTEMS IF APPLICABLE.
    c. DUCT DIAMETER AND MAXIMUM DUCT LENGTH PER ASHRAE 62.2 TABLE 7.1.
    d. TYPE OF SYSTEM USED AND PROVIDE COMPLETED CF-6R-MECH-05 FORM.
    e. FANS SHALL BE A MAXIMUM OF 1 SONE.
    f. FANS SHALL BE PROVIDED A COVER OF R-4.2 WHEN OFF.
11. **ATTIC ACCESS:**
    a. PROVIDE 30" MIN. HEADROOM IN THE ATTIC SPACE (2019 CRC R807.1)
    b. IN ATTIC, PROVIDE LIGHT AND SWITCH, AND ALL NECESSARY ELECTRICAL. PROVIDE UNOBSTRUCTED PASSAGEWAY 24" WIDE OF SOLID CONTINUOUS FLOORING FROM ACCESS TO EQUIPMENT AND IT'S CONTROLS. ALSO PROVIDE UNOBSTRUCTED WORK SPACE IN FRONT OF EQUIPMENT 30" DEPTH MINIMUM. PROVIDE COMBUSTION AIR AND CONDENSATE LINE TO OUTSIDE OR AN APPROVED DRAIN FOR OPTIONAL AIR CONDITIONING.
    c. BUILDINGS WITH COMBUSTIBLE CEILING OR ROOF CONSTRUCTION SHALL HAVE AN ATTIC ACCESS OPENING TO ATTIC AREAS THAT EXCEED 30 SQUARE FEET AND HAVE A VERTICAL HEIGHT OF 30-INCHES OR GREATER. THE VERTICAL HEIGHT SHALL BE MEASURED FROM TOP OF THE CEILING FRAMING MEMBERS TO THE UNDERSIDE OF THE ROOF FRAMING MEMBERS.
    d. THE ROUGH-FRAMED OPENING SHALL NOT BE LESS THAN 22" X 30" AND SHALL BE LOCATED NOT OVER 20 FEET FROM THE EQUIPMENT. (2022 CRC R807.1)
    e. PROVIDE A 120V RECEPTACLE AND A LIGHT NEAR THE EQUIPMENT WITH LIGHT SWITCH LOCATED AT THE ATTIC ACCESS.

ELECTRICAL NOTES

1. CONFORM WITH CURRENT CEC, NFPA, MFR'S, AND LOCAL REQUIREMENTS.
2. ELECTRICAL SYSTEM GROUND TO BE PROVIDED PER NEC ARTICLE 250-81.
3. ALL MATERIALS TO BE U.L. LABELED.
4. METER: "SQUARE D", 120 VOLT/ 240 VOLT, 1 AND 3 WIRE GROUND OR EQUAL.
5. ELECTRICAL SUB PANEL: FLUSH MOUNT, 30" CLEARANCE. 100 AMP.
6. CONDUCTORS: TW, THW, COPPER, MINIMUM 14 AT LIGHTING, 12 AT OTHER CIRCUITS.
7. LAMPS: FOR GENERAL LIGHTING IN KITCHENS AND BATH SHALL HAVE AN EFFICIENCY OF NOT LESS THAN 40 LUMENS/ WATT. ALL SOCKETS FILLED WITH SOFT-WHITE, 55 WATT FLUORESCENT: COOL WHITE, RS, SOUND RATING "A", 40 WATT (U.O.N.).
8. ALL ELECTRICAL OUTLETS INSTALLED IN BATHROOMS, GARAGES, BASEMENTS, CRAWL SPACES, OUTDOORS, KITCHEN COUNTERS, AND AT WET BAR SINKS SHALL HAVE GROUND-FAULT CIRCUIT-INTERRUPTER PROTECTION IN COMPLIANCE WITH NEC Art. 210-8, CONSISTING OF 125 VOLT, SINGLE-PHASE, 15- AND 20- AMPERE RECEPTACLES.
9. ALL BATHROOM RECEPTACLE OUTLETS SHALL BE SUPPLIED BY A MINIMUM OF ONE 120-VOLT, 20-AMPERE BRANCH CIRCUIT. SUCH CIRCUITS SHALL HAVE NO OTHER OUTLETS. THIS DEDICATED CIRCUIT MAY SERVE MORE THAN ONE BATHROOM. (2022 CEC 210.11(C))
10. PROVIDE ELECTRIC OUTLET AND PUSH-BUTTON WIRE FOR GARAGE OPENER (INCLUDE OPENER).
11. THERMOSTAT SHALL BE A PROGRAMMABLE TYPE, HONEYWELL TH8320 OR EQUAL.
12. RECESSED LUMINAIRES INSTALLED IN AREAS TO RECEIVE INSULATION SHALL BE "IC" LUMINAIRES AND ARE CERTIFIED AND LABELED AS AIRTIGHT TO THE STANDARDS PRESCRIBED BY THE RESIDENTIAL ENERGY CODE.
13. CEILING-SUSPENDED (PADDLE) FANS SHALL BE SUPPORTED INDEPENDENTLY OF AN OUTLET BOX OR BY LISTED OUTLET BOX OR OUTLET BOX SYSTEMS IDENTIFIED FOR THE USE AND INSTALLED IN ACCORDANCE WITH 2022 CEC 314.27(C) (2022 CEC 422.18).
14. ALL LUMINARIES, LAMPHOLDERS, AND RETROFIT KITS SHALL BE LISTED (2022 CEC 410.6).
15. ALL 120-VOLT, SINGLE PHASE 15- AND 20- AMPERE BRANCH CIRCUITS SUPPLYING OUTLETS INSTALLED IN DWELLING UNIT KITCHENS, FAMILY ROOMS, LIVING ROOMS, DINING ROOMS, PARLORS, LIBRARIES, DENS, BEDROOMS, SUNROOMS, RECREATION ROOMS, CLOSETS, HALLWAYS OR SIMILAR ROOMS OR AREAS SHALL BE PROTECTED BY A LISTED ARC-FAULT CIRCUIT INTERRUPTER, COMBINATION-TYPE, INSTALLED TO PROVIDE PROTECTION OF THE BRANCH CIRCUIT. (2022 CEC 210-12(A)).
16. ALL NON-LOCKING TYPE 125-VOLT, 15 AND 20 AMPERE RECEPTACLES IN A DWELLING UNIT SHALL BE LISTED TAMPER-RESISTANT RECEPTACLES. EXCEPTIONS: (1) RECEPTACLES MORE THAN 5'6" ABOVE THE FLOOR, (2) RECEPTACLES PART OF A LUMINAIRE OR APPLIANCE, (3) A SINGLE RECEPTACLE OR A DUPLEX RECEPTACLE FOR TWO APPLIANCES THAT ARE NOT EASILY MOVED AND LOCATED WITHIN DEDICATED SPACE AND ARE CHORD-AND-PLUG CONNECTED AS PER CEC 400.7, AND (4) NON-GROUNDING RECEPTACLES USED FOR REPLACEMNETS AS PERMITTED IN CEC 406.4(D)(2)(A).
17. HIGH EFFICACY LUMINAIRES OTHER THAN OUTDOOR HID LIGHTING CONTAIN ONLY ONLY HIGH EFFICACY LAMPS AS OUTLINED IN TABLE 150-C OF THE RESIDENTIAL ENERGY CODE AND NOT CONTAIN A MEDIUM SCREW BASE SOCKET.
18. BALLAST FOR LAMPS 13 WATTS OR GREATER SHALL BE ELECTRONIC AND HAVE AN OUTPUT FREQUENCY NO LESS THAT 20 kHz.
19. SMOKE DETECTORS SHALL RECEIVE THEIR PRIMARY POWER FROM THE BUILDING WIRING AND PROVIDED WITH A BATTERY BACK-UP. ALL SMOKE DETECTORS SHALL BE INTERCONNECTEED. ALL SMOKE DETECTORS SHALL MAINTAIN A MINIMUM 3 FOOT CLEARANCE TO HVAC SUPPLY OR RETURN AIR REGISTERS.
20. CARBON MONOXIDE ALARMS SHALL RECEIVE THEIR PRIMARY POWER FROM THE BUILDING WIRING AND PROVIDED WITH A BATTERY BACK-UP. ALL CARBON MONOXIDE ALARAMS SHALL BE INTERCONNECTEED.
21. LIGHTS IN OTHER THAN KITCHENS, BATHROOMS, GARAGES, LAUNDRY ROOMS, AND UTILITY ROOMS MUST BE CONTROLLED BY A DIMMER OR CONTROLLED BY A MANUAL-ON OCCUPANT SENSOR. SUCH SENSORS SHALL BE CAPABLE OF AUTOMATICALLY TURNING OFF THE LIGHTS NO MORE THAN 30 MINUTES AFTER THE AREA HAS BEEN VACATED.
22. EXHAUST FANS WILL BE CONTROLLED BY A HUMIDISTAT PER THE GREEN BUILDING STANDARDS CODE SECTION 4.506. EXHAUST FANS MUST BE SWITCHED SEPARATELY FROM LIGHTS *(2022 CEngC 150.0(k)(2))*.
23. OUTDOOR LIGHTING PERMANENTLY MOUNTED TO A RESIDENTIAL BUILDING OR TO OTHER BUILDINGS ON THE SAME LOT SHALL BE HIGH EFFICACY AND MUST MEET THE REQUIREMENTS IN ITEM i AND THE REQUIREMENTS IN EITHER ITEM ii OR ITEM iii:
    - i) CONTROLLED BY A MANUAL **ON** AND **OFF** SWITCH THAT PERMITS THE AUTOMATIC ACTIONS OF ITEMS ii OR iii BELOW; AND
    - ii) CONTROLLED BY A PHOTOCELL AND EITHER A MOTION SENSOR OR AN AUTOMATIC TIME SWITCH CONTROL' OR
    - iii) CONTROLLED BY AN ASTRONOMICAL TIME CLOCK CONTROL.

    NOTE: CONTROLS THAT OVERRIDE TO ON SHALL NOT BE ALLOWED UNLESS THE OVERRIDE AUTOMATICALLY RETURNS THE AUTOMATIC CONTROL TO ITS NORMAL OPERATION WITHIN 6 HOURS. AN ENERGY MANAGEMENT CONTROL SYSTEM THAT PROVIDES THE SPECIFIED LIGHTING CONTROL FUNCTIONALITY AND COMPLIES WITH ALL REQUIREMENTS APPLICABLE TO THE SPECIFIED CONTROLS MAY BE USED TO MEET THESE REQUIREMENTS.

1. AT LEAST ONE LUMINAIRE EACH BATHROOM, LAUNDRY ROOM, AND UTILITY ROOM SHALL BE CONTROLLED BY A MANUAL ON/AUTOMATIC-OFF VACANCY SENSOR.
2. EXCEPT FOR CLOSETS LESS THAN 70 SQUARE FEET AND HALLWAYS, ALL LUMINAIRES THAT ARE INSTALLED WITH JA8-CERTIFIED LIGHT SOURCES ARE REQUIRED TO BE CONTROLLED BY EITHER A DIMMER, VACANCY SENSOR OR FAN SPEED CONTROL.

PLUMBING NOTES

1. CONFORM WITH CURRENT CPC AND LOCAL REQUIREMENTS.
2. PIPING:
   a. DOMESTIC WATER (WITHIN BUILDING): COPPER OR PEX PIPE OR APPROVED EQUAL.
   b. GAS, UNDERGROUND: WRAPPED OR COATED
   c. AIR CHAMBERS: 12" LONG CAPPED NIPPLE AT END OF EACH BRANCH TO EACH FIXTURE.
   d. DIELECTRIC UNIONS "F.P.C.O." REQUIREMENT AT ALL DISSIMILAR MATERIAL CONNECTIONS.
   e. WHEN "OPTIONAL" SOFT-WATER LOOP INTALLED, PROVIDE WITH 2 GATE VALVES.
3. WATER SERVICE PIPE SHALL BE PER CIVIL PLANS OR AS REQUIRED BY THE JURISDICTION.
4. WATER METER: PER WATER DISTRICT (REFER SIZE W/ FIRE SPRINKLER PLANS IF APPLICABLE)
5. SHOWER HEADS AND FAUCETS: FLOW RATES PER 2022 *CGBSC SECTION 4.303*.
6. PIPE INSULATION: REFER TO TITLE 24 - MANDATORY MEASURES - "SPACE CONDITIONING, WATER HEATING & PLUMBING SYSTEM MEASURES"
7. STRAPS AND HANGERS: PROVIDE AS NECESSARY TO INSURE A STABLE INSTALLATION. SEE TITLE-24 FOR WATER HEATER REQUIREMENTS.
8. ALL HOSE BIBS SHALL HAVE APPROVED BACK FLOW PREVENTION DEVICES.
9. PLUMBING FIXTURES (WATER CLOSETS) AND FITTINGS (FAUCETS AND SHOWERHEADS) SHALL MEET THE STANDARDS REFERENCED IN CALGREEN TABLE 4.303.3.
10. WATER HEATER SHALL BE PROVIDED WITH A TEMPERATURE AND PRESSURE RELIEF VALVE. PER [2022 CPC 505.2] THE RELIEF VALVE SHALL BE PROVIDED WITH A DRAIN LINE WHICH EXTENDS FROM THE VALVES TO THE OUTSIDE OF THE BUILDING. PER [2022 608.5 CPC]
11. PER 2022 CPC 603.5.7 OUTLETS WITH HOSE ATTATCHMENTS. POTABLE WATER OUTLETS WITH HOSE ATTACHMENTS, OTHER THAN WATER HEATER DRAINS, BOILER DRAINS, AND CLOTHES WASHER CONNECTIONS, SHALL BE PROTECTED BY A NONREMOVABLE HOSE BIBB TYPE BACKFLOW PREVENTER, A NONREMOVABLE HOSE BIBB TYPE VACUMM BREAKER, OR BY AN ATMOSPHERE VACUUM BREAKER INSTALLED NOT LESS THAN 6 INCHES ABOVE THE HIGHEST POINT OF USAGE LOCATED ON THE DISCHARGE SIDE OF THE LAST VALVE. IN CLIMATES WHERE FREEZING TEMPERATURES OCCUR, A LISTED SELF DRAINING FROST-PROOF HOSE BIBB WITH AN INTEGRAL BACKFLOW PREVENTER OR VACUUM BREAKER SHALL BE USED.

MECHANICAL NOTES

1. CONFORM WITH CURRENT ADOPTED CRC, CMC, SMACCNA, NFPA AND LOCAL REQUIREMENTS.
2. DUCTWORK: SMACCNA "LOW VELOCITY DUCT CONSTRUCTION" NFPA STANDARD #90A. ALL TRANSVERSE DUCT PLENUM AND FITTING JOINTS SHALL BE SEALED WITH PRESSURE SENSITIVE NON-CLOTH TAPE MEETING THE REQUIREMENTS OF UL181, 181A, OR 181B, OR MASTIC TO PREVENT AIR LOSS. DUCTS SHALL BE INSULATED AS REQUIRED BY THE UMC. SEE FLOOR PLAN FOR F.A.U. AND FIREPLACES. DUCTS PENETRATING A WALL OR FLOOR-CEILING BETWEEN GARAGE & DWELLING TO BE MINIMUM 26 GAUGE METAL WITHOUT OPENING IN GARAGE. FIRE DAMPER REQUIRED OTHERWISE.
3. GRILLES AND REGISTERS, DIFFUSERS, ETC: SUBJECT TO OWNERS APPROVAL. "CARNES" OR EQUAL FANS: DIRECTLY VENTED TO OUTSIDE, BACK DRAFT DAMPERS ARE REQUIRED (PER TABLE 2-53V, TITLE 24 C.A.C.).
4. THE RETURN AIR PLENUM SERVING THE MECHANICAL EQUIPMENT MUST BE FULLY DUCTED FROM THE EQUIPMENT TO THE CONDITIONED SPACE. DROP CEILINGS, WALL CAVITIES AND EQUIPMENT PLATFORMS MAY NOT BE USED AS PLENUMS.
5. LAUNDRY DRYER VENT TO EXTERIOR TO BE 14 FEET MAXIMUM, LESS 2 FEET PER 90 DEGREE TURN PER CMC 504.3.2.2. IF VENT IS OVER 14' AN APPROVED POWER ASSISTED DEVICE IS REQUIRED.
6. BATHROOM EXHAUST FANS (BATHROOM APPLIES TO ROOMS CONTAINING BATHTUB, SHOWER, OR TUB/SHOWER COMBINATION) WHICH EXHAUST DIRECTLY FROM BATHROOMS SHALL COMPLY WITH THE FOLLOWING *(2022 CGBSC SEC. 4.506.1)*:
   a. FANS SHALL BE ENERGY STAR COMPLIANT AND BE DUCTED TO TERMINATE OUTSIDE THE BUILDING MIN 3' FROM OPENINGS.
   b. UNLESS FUNCTIONING AS A COMPONENT OF A WHOLE HOUSE VENTILATION SYSTEM, FANS MUST BE CONTROLLED BY A HUMIDITY CONTROL.
      - HUMIDITY CONTROLS SHALL BE CAPABLE OF ADJUSTMENT BETWEEN A RELATIVE HUMIDITY RANGE OF ≤ 50 PERCENT TO A MAXIMUM OF 80 PERCENT. A HUMIDITY CONTROL MAY UTILIZE MANUAL OR AUTOMATIC MEANS OF ADJUSTMENT.
      - A HUMIDITY CONTROL MAY BE A SEPARATE COMPONENT TO EXHAUST FAN AND IS NOT REQUIRED TO BE INTEGRAL(I.E. BUILT IN)
7. BATHROOM EXHAUST FANS SHALL PROVIDE MINIMUM 50 CFM EXHAUST RATE *(2022 CMC TABLE 403.7)*.
8. KITCHEN EXHAUST FANS SHALL PROVIDE MINIMUM 100 CFM EXHAUST RATE *(2022 CMC TABLE 403.7)*
9. PER 2022 CEnC 150(m) PORTIONS OF SUPPLY-AIR AND RETURN-AIR DUCTS AND
   PLENUMS SHALL BE INSULATED TO A MINIMUM INSTALLED LEVEL OF R-6.0 (OR ANY LEVEL HIGHER LEVEL REQUIRED BY 2022 CMC SECTION 605) OR BE ENCLOSED ENTIRELY IN CONDITIONED SPACE.

TITLE 24 COMPLIANCE

1. ALL INTERIOR RESIDENTIAL LIGHTING IS TO BE HIGH EFFICACY.
2. THE FOLLOWING LIGHTING IS HIGH EFFICACY: PIN BASED LINEAR FLUORESCENT, PIN BASED COMPACT FLUORESCENT, PULSE-START METAL HALIDE, HIGH PRESSURE SODIUM, GU-24 (OTHER THAN LED'S), INSEPARABLE SOLID STATE LUMINAIRES (SSL'S) INSTALLED OUTDOORS OR INSEPARABLE SSL LUMINAIRES WITH COLORED LIGHT SOURCES FOR DECORATIVE LIGHTING PURPOSES. (2022 CEnC TABLE 150.0-A)
3. THE FOLLOWING LAMPS AND LIGHT SOURCES ARE HIGH EFFICACY IF THEY ARE JOINT APPENDIX JA8-CERTIFIED. JA-8 CERTIFIED LAMPS AND LIGHT SOURCES ARE MARKED AS "JA8-2016" OR "JA8-2016-E". THESE FIXTURES INCLUDE: LED LUMINAIRES WITH INTEGRAL SOURCES THAT ARE CERRTIFIED TO THE ENERGY COMMISION, SCREW-BASED LED LAMPS (A-LAMPS, PAR LAMPS, ETC.), PIN BASED LED LAMPS (MR-16,AR-111, ETC.), GU-24 BASED LED LIGHT SOURCES AND OTHER LUMINAIRES. (2022 CEnC TABLE 150.0-A)
   LISTING OF CA CERTIFIED FIXTURES IS LOCATED ON THE CALIFORNIA ENERGY COMMISSION WEBSITE AT: HTTP://APPLIANCES.ENERGY.CA.GOV/ADVANCEDSEARCH/ASPX
4. RECESSED LUMINAIRES INSTALLED IN AREAS TO RECEIVE INSULATION SHALL BE "IC" LUMINAIRES AND ARE CERTIFIED AND LABELED AS AIRTIGHT TO THE STANDARDS PRESCRIBED BY THE RESIDENTIAL ENERGY CODE.
5. ADDITIONAL REQUIREMENTS FOR ANY RECESSED DOWNLIGHTS IN CEILINGS ARE AS FOLLOWS. THEY
   a. SHALL NOT HAVE SCREW BASED SOCKETS,
   b. SHALL CONTAIN JA8-CERTIFIED LIGHT SOURCES AND
   c. SHALL MEET PERFORMANCE REQUIREMENTS OF 2022 CEnC SECTION 150.0(K)1C.
6. THE NUMBER OF ELECTRICAL BOXES LOCATED MORE THAN 5 FEET ABOVE FINISHED FLOOR THAT DO NOT CONTAIN ALUMINAIRE OR OTHER DEVICE SHALL NOT EXCEED THE NUMBER OF BEDROOMS. THESE BOXES MUST BE SERVED BY A DIMMER, VACANCY SENSOR OR FAN SPEED CONTROL. (2022 CEnC SECTION 150(K)1(B))
7. UNDERCABINET LIGHTING MUST BE SWITCHED SEPARATE FROM ALL OTHER LIGHTING.
8. ALL LIGHTING MUST HAVE READILY ACCESSIBLE MANUAL CONTROLS
9. EXHAUST FANS MUST BE SWITCHED SEPARATE FROM LIGHTING OR UTILIZE A DEVICE WHERE LIGHTING CAN BE TURNED OFF WHILE THE FAN IS RUNNING.
10. FOR ALL SPACE TYPES EXCEPT HALLWAYS AND CLOSETS THAT ARE 70 SF OR SMALLER, VANCANY SENSORS OR DIMMERS ARE REQUIRED WHEN USING A SOURCE REGULATED BY JA8.
11. IN KITCHENS, IF THE LUMINAIRE IS AN ENCLOSED OR RECESSED LUMINAIRE, YOU MUST USE A DIMMER OR VACANY SENSOR.
12. AT LEAST ONE LUMINAIRE IN THE BATHROOM, GARAGE, LAUNDRY ROOM AND UTILITY ROOM MUST BE CONTROLLED BY A VACANY SENSOR.
13. THE BUILDER MUST PROVIDE NEW HOMEWONERS WITH A LUMINAIRE SCHEDULE THAT INCLUDES A LIST OF INSTALLED LAMPS AND LUMINARIES.
14. ALL JOINTS, PENETRATIONS AND OTHER OPENINGS IN THE BUILDING ENVELOPE THAT ARE POTENTIAL SOURCES OF AIR LEAKAGE SHALL BE CAULKED, GASKETED, WEATHER-STRIPPED OR OTHERWISE SEALED TO LIMIT INFILTRATION AND EXFILTRATION (2022 CEnC 110.7).
15. ATTIC ACCESS DOORS SHALL HAVE PERMANENTLY ATTACHED INSULATION USING ADHESIVE OR MECHANICAL FASTENERS. THE ATTIC ACCESS SHALL BE GASKETED TO PREVENT AIR LEAKAGE (2022 CEnC 150.0(a)2)
16. ALL INSTALLED LUMINAIRES SHALL BE HIGH EFFICACY IN ACCORDANCE WITH CEnC TABLE 150.0-A. (2022 CEnC 150(k)1A).
17. THE NUMBER OF ELECTRICAL BOXES THAT ARE MORE THAN 5 FEET ABOVE THE FINISHED FLOOR AND DO NOT CONTAIN A LUMINAIRE OR OTHER DEVICE SHALL BE NO GREATER THAN THE NUMBER OF BEDROOMS. THESE ELECTRICAL BOXES MUST BE SERVED BY A DIMMER, VACANCY SENSOR CONTROL, OR FAN SPEED CONTROL. (2022 CEnC 150(k)1B).

SOLAR READY NOTES

SOLAR READY REQUIREMENTS PER CeNC 110.10(b) THROUGH 110.10(e)

SOLAR ZONE:
1. **MINIMUM AREA.** THE SOLAR ZONE SHALL HAVE A MINIMUM TOTAL AREA AS DESCRIBED BELOW. THE SOLAR ZONE SHALL COMPLY WITH ACCESS, PATHWAY, SMOKE VENTILATION, AND SPACING REQUIREMENTS AS SPECIFIED IN TITLE 24, PART 9 OR OTHER PARTS OF TITLE 24 OR IN ANY REQUIREMENTS ADOPTED BY A LOCAL JURISDICTION.
2. THE SOLAR ZONE TOTAL AREA SHALL BE COMPRISED OF AREAS THAT HAVE NO DIMENSION LESS THAN FIVE FEET AND ARE NO LESS THAN 80 SQUARE FEET EACH FOR BUILDINGS WITH ROOF AREAS LESS THAN OR EQUAL TO 10,000 SQUARE FEET OR NO LESS THAN 160 SQUARE FEET EACH FOR BUILDINGS WITH ROOF AREAS GREATER THAN 10,000 SQUARE FEET.
   A. **SINGLE FAMILY RESIDENCES.** THE SOLAR ZONE SHALL BE LOCATED ON THE ROOF OR OVERHANG OF THE BUILDING AND HAVE A TOTAL AREA NO LESS THAN 250 SQUARE FEET.

   EXCEPTION 1 TO SECTION 110.10(B)1A: SINGLE FAMILY RESIDENCES WITH A PERMANENTLY INSTALLED DOMESTIC SOLAR WATER-HEATING SYSTEM MEETING THE INSTALLATION CRITERIA SPECIFIED IN THE REFERENCE RESIDENTIAL APPENDIX RA4 AND WITH A MINIMUM SOLAR SAVINGS FRACTION OF 0.50.

   EXCEPTION 5 TO SECTION 110.10(B)1A: SINGLE FAMILY RESIDENCES HAVING A SOLAR ZONE TOTAL AREA NO LESS THAN 150 SQUARE FEET AND WHERE ALL THERMOSTATS ARE DEMAND RESPONSIVE CONTROLS AND COMPLY WITH SECTION 110.12(A), AND ARE CAPABLE OF RECEIVING AND RESPONDING TO DEMAND RESPONSE SIGNALS PRIOR TO GRANTING OF AN OCCUPANCY PERMIT BY THE ENFORCING AGENCY.

   EXCEPTION 6 TO SECTION 110.10(B)1A: SINGLE-FAMILY RESIDENCES MEETING THE FOLLOWING CONDITIONS:
   A. ALL THERMOSTATS ARE DEMAND RESPONSIVE CONTROLS THAT COMPLY WITH SECTION 110.12(A), AND ARE CAPABLE OF RECEIVING AND RESPONDING TO DEMAND RESPONSE SIGNALS PRIOR TO GRANTING OF AN OCCUPANCY PERMIT BY THE ENFORCING AGENCY.
   B. COMPLY WITH ONE OF THE FOLLOWING MEASURES:
      a. INSTALL A DISHWASHER THAT MEETS OR EXCEEDS THE ENERGY STAR® PROGRAM REQUIREMENTS WITH A REFRIGERATOR THAT MEETS OR EXCEEDS THE ENERGY STAR PROGRAM REQUIREMENTS, A WHOLE HOUSE FAN DRIVEN BY AN ELECTRONICALLY COMMUTATED MOTOR, OR AN SAE J1772 LEVEL 2 ELECTRIC VEHICLE SUPPLY EQUIPMENT (EVSE OR EV CHARGER) WITH A MINIMUM OF 40 AMPERES; OR
      b. INSTALL A HOME AUTOMATION SYSTEM CAPABLE OF, AT A MINIMUM, CONTROLLING THE APPLIANCES AND LIGHTING OF THE DWELLING AND RESPONDING TO DEMAND RESPONSE SIGNALS; OR
      c. INSTALL ALTERNATIVE PLUMBING PIPING TO PERMIT THE DISCHARGE FROM THE CLOTHES WASHER AND ALL SHOWERS AND BATHTUBS TO BE USED FOR AN IRRIGATION SYSTEM IN COMPLIANCE WITH THE CALIFORNIA PLUMBING CODE AND ANY APPLICABLE LOCAL ORDINANCES; OR
      d. INSTALL A RAINWATER CATCHMENT SYSTEM DESIGNED TO COMPLY WITH THE CALIFORNIA PLUMBING CODE AND ANY APPLICABLE LOCAL ORDINANCES, AND THAT USES RAINWATER FLOWING FROM AT LEAST 65 PERCENT OF THE AVAILABLE ROOF AREA.

WILDLAND-URBAN INTERFACE

1. ROOF COVERING SHALL COMPLY WITH ***2022 CRC R337.5.2***.UNDERLAYMENT SHALL BE ONE LAYER OF OF MINUMIM 72 POUND MINERAL-SURFACED NONPERFORATED CAP SHEET COMPLYING WITH ASTM D3909 INSTALLED OVER THE COMBUSTIBLE DECKING. ALTERNATELY, A CLASS A FIRE RATED ROOF UNDERLAYMENT, TESTED IN ACCORDANCE WITH ASTM E108, SHALL BE PERMITTED TO BE USED.
2. ROOF VALLEYS SHALL COMPLY WITH ***2022 CRC R337.5.3***. VALLEY FLASHING SHALL BE NOT LESS THAN 26 GAGE GALVANIZED SHEET CORROSIVE RESISTANT METAL INSTALLED OVER NOT LESS THAN ONE LAYER OF MINUMIM 72 POUND MINERAL-SURFACED NONPERFORATED CAP SHEET COMPLYING WITH ASTM D3909, AT LEAST 36 INCHES WIDE RUNNING THE FULL LENGTH OF THE VALLEY.
3. ROOF GUTTERS SHALL COMPLY WITH ***2022 CRC R337.5.4***. ROOF GUTTERS SHALL BE PROVIDE WITH THE MEANS TO PREVENT THE ACCUMULATION OF LEAVES AND DEBRIS IN THE GUTTER.
4. VENTILATION OPENINGS SHALL COMPLY WITH ***2022 CRC R337.6*** - VENTILATION OPENINGS FOR ENCLOSED ATTICS, ENCLOSED EAVE SOFFIT SPACES, ENCLOSED RAFTER SPACES FORMED WHERE CEILINGS ARE APPLIED DIRECTLY TO THE UNDERSIDE OF ROOF RAFTERS, AND UNDERFLOOR VENTILATION OPENINGS SHALL BE FULLY COVERED WITH METAL WIRE MESH, VENTS, OTHER MATEIALS, OR OTHER DEVICES. REFER TO ***SECTIONS R337.6.1*** THROUGH ***R337.6.3*** FOR ADDITIONAL INFORMATION.
5. EXTERIOR COVERINGS SHALL COMPLY WITH ***2022CRC R337.7*** EXTERIOR WALL COVERINGS OR WALL ASSEMBLIES SHALL COMPLY WITH ONE OF THE FOLLOWING REQUIREMENTS: BE OF NONCOMBUSTIBLE MATERIAL, IGNITION-RESISTANT MATERIAL, HEAVY TIMBER EXTERIOR WALL ASSEMBLY, LOG WALL CONSTRUCTION ASSEMBLY, OR WALL ASSEMBLIES THAT MEET THE PERFORMANCE CRITERIA IN ACCORDANCE WITH THE TEST PROCEDURES FOR A 10-MINUTE DIRECT FLAME CONTACT EXPOSURE TEST SET FORTH IN SFM STANDARD 12-7A-1. REFER TO ***SECTIONS R337.7.1*** THROUGH ***R337.7. 9*** FOR ADDITIONAL INFORMATION.

SITE NOTES

1. **CALL BEFORE YOU DIG!** CONTACT UNDERGROUND SERVICE ALERT (USA) AT 1-800-227-2600 AT LEAST 2 WORKING DAYS BEFORE EXCAVATING.
2. UNLESS OTHERWISE NOTED ON THE PLANS, FINISHED GROUND SURFACES SHALL BE GRADED TO DRAIN THE FINISHED SITE PROPERLY WITHIN 10-FEET OF ANY BUILDING FOUNDATION WITH A SLOPE OF 5% AWAY FROM ANY BUILDING OR STRUCTURE. ALL EXTERIOR HARDSCAPE WITHIN 10-FEET OF A BUILDING FOUNDATION SHALL BE INSTALLED WITH A 2% MINIMUM SLOPE AWAY FROM ANY BUILDING OR STRUCTURE. DRAINAGE SWALES SHALL BE A 1.5% MINIMUM SLOPE. ALL GRADED SLOPES SHALL HAVE A MAXIMUM SLOPE OF 3H TO 1V (33%), UNLESS SHOWN OTHERWISE ON THE PLANS.
3. LOT GRADING SHALL CONFORM AT THE PROPERTY LINES AND SHALL NOT SLOPE TOWARD PROPERTY LINES IN A MANNER WHICH WOULD CAUSE STORM WATER TO FLOW ONTO NEIGHBORING PROPERTY. HISTORIC DRAINAGE PATTERNS SHALL NOT BE ALTERED IN A MANNER TO CAUSE DRAINAGE PROBLEMS TO NEIGHBORING PROPERTY.
4. NEW RAINWATER DOWNSPOUTS SHALL BE DISCONNECTED AND DIRECT RUNOFF TO A LANDSCAPED AREA. DOWNSPOUTS MAY BE CONNECTED TO A POP-UP DRAINAGE EMITTER IN THE LANDSCAPED AREA OR MAY DRAIN TO SPLASH BLOCKS OR COBBLESTONES THAT DIRECT WATER AWAY FROM THE BUILDING.
5. CONTRACTOR TO FIELD VERIFY EXISTING DRAINAGE. IF THE EXISTING DRAINAGE SYSTEM IS DAMAGED DURING EXCAVATION, CONTRACTOR SHALL REPAIR AND/OR REROUTE DRAINAGE SYSTEM AND CONNECT TO EXISTING DRAINAGE FACILITY AS NECESSARY.
6. EXISTING PUBLIC IMPROVEMENTS THAT ARE DAMAGED BY THE PROJECT CONSTRUCTION SHALL BE REPAIRED OR REPLACED. EXISTING DAMAGED PUBLIC IMPROVEMENTS WITHIN THE PROJECT LIMITS SHALL BE REPAIRED OR REPLACED EVEN IF THE DAMAGE OCCURRED PRIOR TO THE START OF CONSTRUCTION.
7. EROSION AND SEDIMENT CONTROL FACILITIES SHALL BE INSTALLED PRIOR TO OCTOBER 1 AND SHALL BE MAINTAINED DAILY UNTIL APRIL 30. THESE FACILITIES SHALL CONTROL AND CONTAIN EROSION-CAUSED SILT DEPOSITS AND PROVIDE FOR THE SAFE DISCHARGE OF SILT-FREE STORM WATERS INTO EXISTING STORM DRAIN FACILITIES. EROSION AND SEDIMENT CONTROL SUPPLIES MUST BE KEPT ON-SITE DURING THE DRY SEASON AND EMPLOYED, AS NECESSARY PRIOR TO AND DURING RAIN EVENTS.
8. SEASONALLY APPROPRIATE BEST MANAGEMENT PRACTICES FOR THE FOLLOWING SITE MANAGEMENT CATEGORIES MUST BE IMPLEMENTED YEAR-ROUND: 1) EROSION CONTROL; 2) RUN-ON AND RUN-OFF CONTROL; 3) SEDIMENT CONTROL; 4) GOOD SITE MANAGEMENT; AND 5) NON-STORMWATER MANAGEMENT.
9. AN ENCROACHMENT PERMIT WILL BE REQUIRED FOR ANY CONSTRUCTION ACTIVITY WITHIN A PUBLIC STREET RIGHT OF WAY THAT HAS BEEN ACCEPTED BY THE CITY.

ENERGY STORAGE READINESS

1. **ENERGY STORAGE SYSTEM (ESS) REQUIREMENTS:**
   - IN SINGLE-FAMILY RESIDENTIAL BUILDINGS THAT INCLUDE ONE OR TWO DWELLINGS, EACH DWELLING UNIT SHALL BE PROVIDED WITH DEDICATED RACEWAYS, DESIGNATED BRANCH CIRCUITS AND ISOLATION DEVICES FOR ENERGY STORAGE SYSTEMS AS SPECIFIED IN CALIFORNIA ENERGY CODE SECTION 150.0(S). ADDITIONALLY, THE PANELBOARDS SHALL BE PROVIDED WITH THE MINIMUM BUSBAR RATING AS SPECIFIED IN CALIFORNIA ENERGY CODE SECTION 150.0(S). (2022 CEC SECTION 706.10)

CALIFORNIA ENERGY CODE SECTION 150.0(S)
1. AT LEAST ONE OF THE FOLLOWING SHALL BE PROVIDED:
   A. ESS READY INTERCONNECTION EQUIPMENT WITH A MINIMUM BACKED-UP CAPACITY OF 60 AMPS AND A MINIMUM OF FOUR ESS-SUPPLIED BRANCH CIRCUITS, OR
   B. A DEDICATED RACEWAY FROM THE MAIN SERVICE TO A PANELBOARD (SUBPANEL) THAT SUPPLIES THE BRANCH CIRCUITS IN SECTION 150.0(S)(2). ALL BRANCH CIRCUITS ARE PERMITTED TO BE SUPPLIED BY THE MAIN SERVICE PANEL PRIOR TO THE INSTALLATION OF AN ESS. THE TRADE SIZE OF THE RACEWAY SHALL BE NOT LESS THAN 1 INCH. THE PANELBOARD THAT SUPPLIES THE BRANCH CIRCUITS (SUBPANEL) MUST BE LABELED "SUBPANEL SHALL INCLUDE ALL BACKEDUP LOAD CIRCUITS."
2. A MINIMUM OF FOUR BRANCH CIRCUITS SHALL BE IDENTIFIED AND HAVE THEIR SOURCE OF SUPPLY COLLOCATED AT A SINGLE PANELBOARD SUITABLE TO BE SUPPLIED BY THE ESS. AT LEAST ONE CIRCUIT SHALL SUPPLY THE REFRIGERATOR, ONE LIGHTING CIRCUIT SHALL BE LOCATED NEAR THE PRIMARY EGRESS AND AT LEAST ONE CIRCUIT SHALL SUPPLY A SLEEPING ROOM RECEPTACLE OUTLET.
3. THE MAIN PANELBOARD SHALL HAVE A MINIMUM BUSBAR RATING OF 225 AMPS.
4. SUFFICIENT SPACE SHALL BE RESERVED TO ALLOW FUTURE INSTALLATION OF A SYSTEM ISOLATION EQUIPMENT/TRANSFER SWITCH WITHIN 3 FEET OF THE MAIN PANELBOARD. RACEWAYS SHALL BE INSTALLED BETWEEN THE PANELBOARD AND THE SYSTEM ISOLATION EQUIPMENT/TRANSFER SWITCH LOCATION TO ALLOW THE CONNECTION OF BACKUP POWER SOURCE.

These plans are only to be used within City of Carpinteria jurisdiction. By using these standard plans ("ADU Plans") in accordance with the City of Carpinteria's Pre-Approved ADU Construction Plans Program, the User agrees to defend, indemnify, and hold harmless the City of Carpinteria and RRM from any and all claims, liabilities, suits, and demands on account of any injury, damage, or loss to persons or property, including injury or death, or economic losses, arising out of the use of these ADU Plans. The use of these ADU Plans does not eliminate or reduce the user's responsibility to verify any and all information herein.

CARPINTERIA ADU PROTOTYPES
SANTA BARBARA COUNTY, CA
GENERAL NOTES

DATE
0218/23

SHEET
G-101

5/11/2023 4:50:45 PM
C:\Users\mjenkins\OneDrive - RRM Design Group\Documents\2727-01 Carpinteria ADU_Public Set_mjenkins.rvt

GENERAL NOTES

1. APPLICABLE CODES AND STANDARDS:
1.1. 2022 CALIFORNIA BUILDING CODE AND ITS APPENDICES AND STANDARDS.
1.2. 2022 CALIFORNIA PLUMBING CODE AND ITS APPENDICES AND STANDARDS.
1.3. 2022 CALIFORNIA MECHANICAL CODE AND ITS APPENDICES AND STANDARDS.
1.4. 2022 CALIFORNIA FIRE CODE AND ITS APPENDICES AND STANDARDS.
1.5. 2022 CALIFORNIA ELECTRICAL CODE AND ITS APPENDICES AND STANDARDS.
1.6. 2022 CALIFORNIA BUILDING ENERGY EFFICIENCY STANDARDS.
1.7 2022 CALIFORNIA GREEN BUILDING STANDARDS CODE AND ITS APPENDICES AND STANDARDS.
1.8 CURRENT CITY OF CARPINTERIA, CA MUNICIPAL CODE.
2. ALL WORK DESCRIBED IN THE DRAWINGS SHALL BE VERIFIED FOR DIMENSION, GRADE, EXTENT AND COMPATIBILITY WITH EXISTING SITE CONDITIONS. ANY DISCREPANCIES AND UNEXPECTED CONDITIONS THAT AFFECT OR CHANGE THE WORK DESCRIBED IN THE CONTRACT DOCUMENTS SHALL BE BROUGHT TO THE ARCHITECT'S ATTENTION IMMEDIATELY. DO NOT PROCEED WITH THE WORK IN THE AREA OF DISCREPANCIES UNTIL ALL SUCH DISCREPANCIES ARE RESOLVED. IF THE CONTRACTOR CHOOSES TO DO SO, HE/SHE SHALL BE PROCEEDING AT HIS/HER OWN RISK.
3. DIMENSIONS SHOWN SHALL TAKE PRECEDENCE OVER DRAWING SCALE OR PROPORTION. LARGER SCALE DRAWINGS SHALL TAKE PRECEDENCE OVER SMALLER SCALE DRAWINGS.
4. IN THE EVENT OF THE UNFORESEEN ENCOUNTER OF MATERIALS SUSPECTED TO BE OF AN ARCHAEOLOGICAL OR PALEONTOLOGICAL NATURE, ALL GRADING AND EXCAVATION SHALL CEASE IN THE IMMEDIATE AREA AND THE THE CONTRACTOR SHALL NOTIFY THE OWNER. THE FIND SHALL BE LEFT UNTOUCHED UNTIL AN EVALUATION BY A QUALIFIED ARCHAEOLOGIST OR PALEONTOLOGIST IS MADE.
5. CONTRACTOR IS TO BE RESPONSIBLE FOR BEING FAMILIAR WITH THESE DOCUMENTS INCLUDING ALL CONTRACT REQUIREMENTS.
6. GRADING PLANS, DRAINAGE IMPROVEMENTS, ROAD AND ACCESS REQUIREMENTS AND ENVIRONMENTAL HEALTH CONSIDERATIONS SHALL COMPLY WITH ALL LOCAL ORDINANCES.
7. FIRE SPRINKLER SHOP DRAWINGS & CALCULATIONS SHALL BE SUBMITTED TO BUILDING DEPT. & APPROVED BY FIRE DEPT. PRIOR TO INSTALLATION.
8. SHOP WELDS MUST BE PERFORMED BY A LICENSED FABRICATOR'S SHOP.
9. OSHA PERMITS REQUIRED FOR VERTICAL CUTS 5' OR OVER.
10. CONTRACTOR TO PROVIDE COMPLETE DETAILS OF ENGINEERED TEMPORARY SHORING OR SLOT CUTTING PROCEDURES ON PLANS. CALL FOR INSPECTION BEFORE EXCAVATION BEGINS.
11. CONTRACTOR TO REVIEW CALIFORNIA GREEN CODE REQUIREMENTS FOR CONTRACTOR REQUIREMENTS.
12. VERIFY FIRE SPRINKLER AND FIRE ALARM REQUIREMENTS WITH AHJ, CSFD, AND FIRE MARSHAL

ABBREVIATIONS

A/C	AIR CONDITIONING
ABV	ABOVE
ACOUS	ACOUSTICAL
ACT	ACOUSTICAL CEILING TILE
ADA	AMERICANS WITH DISABILITIES ACT
AFCI	ARC FAULT CIRCUIT INTERRUPTER
AFF	ABOVE FINISH FLOOR
AL	ALUMINUM
ALT	ALTERNATE
ARCH	ARCHITECT(URAL)
BD	BOARD
BDRM	BEDROOM
BET	BETWEEN
BIT	BITUMINOUS
BLDG	BUILDNG
BLKG	BLOCKING
BLW	BELOW
BM	BEAM
BOT	BOTTOM
BUR	BUILT UP ROOF
CB	CATCH BASIN
CBC	CALIFORNIA BUILDING CODE
CEM	CEMENT
CFM	CUBIC FEET PER MINUTE
CIP	CAST IN PLACE
CJ	CONTROL JOINT
CL	CENTER LINE
CLG	CEILING
CLO	CLOSET
CLR	CLEAR
CMU	CONCRETE MASONRY UNIT
CO	CLEAN OUT
COL	COLUMN
CONC	CONCRETE
CONST	CONSTRUCTION
CONT	CONTINUOUS
CONTR	CONTRACTOR
CPT	CARPET
CT	CERAMIC TILE
CTR	CENTER
DBL	DOUBLE
DF	DRINKING FOUNTAIN
DIA	DIAMETER, DIAPHRAGM
DIM	DIMENSION
DN	DOWN
DR	DOOR
DS	DOWN SPOUT
DTL	DETAIL
DW	DISHWASHER
DWG	DRAWING
(E)	EXISTING
E	EAST
EA	EACH
EJ	EXPANSION JOINT
EL, ELEV	ELEVATION
ELEC	ELECTRIC
ENCL	ENCLOSURE
EQ	EQUAL
EQUIP	EQUIPMENT
EXH	EXHAUST
EXP	EXPANSION
EXT	EXTERIOR
FACP	FIRE ALARM CONTROL PANEL
FAU	FORCED AIR UNIT
FAWP	FLUID APPLIED WATERPROOFING
FD	FLOOR DRAIN
FDC	FIRE DEPARTMENT CONNECTION
FE	FIRE EXTINGUISHER
FEC	FIRE EXTINGUISHER CABINET
FF	FINISHED FLOOR ELEVATION
FG	FINISHED GRADE
FH	FIRE HYDRANT
FHC	FIRE HOSE CABINET
FIN	FINISH
FIXT	FIXTURE
FLR	FLOOR
FLUOR	FLOURESCENT
FND	FOUNDATION
FO	FACE OF
FOC	FACE OF CONCRETE
FOF	FACE OF FINISH
FOIC	FURNISHED BY OWNER INSTALLED BY CONTRACTOR
FOM	FACE OF MASONRY
FOS	FACE OF STUD
FRP	FIBERGLASS REINFORCED PANELS
FT	FOOT OR FEET
FTG	FOOTING
GA	GAUGE, GAGE
GALV	GALVANIZED
GB	GRAB BAR
GC	GENERAL CONTRACTOR
GFCI	GROUND FAULT CIRCUIT INTERRUPTER
GWB	GYPSUM BOARD
GYP	GYPSUM
HB	HOSE BIBB
HC	HOLLOW CORE
HDWD	HARDWOOD
HDWR	HARDWARE
HGT	HEIGHT
HM	HOLLOW METAL
HORIZ	HORIZONTAL
HVAC	HEATING, VENTILATION, A/C
ID	INSIDE DIAMETER
IIC	IMPACT INSULATION CLASS
IN	INCH
INCAND	INCANDESCENT
INSUL	INSULATION, INSULATED
INT	INTERIOR
JC	JANITORS CLOSET
JT	JOINT
LAM	LAMINATE
LAV	LAVATORY
LBS	POUNDS
LEED	LEADERSHIP IN ENERGY AND ENVIRONMENTAL DESIGN
LF	LINEAR FEET
LIN	LINEN CLOSET
LINO	LINOLEUM
LT(G)	LIGHT(ING)
LVL	LAMINATED VENEER LUMBER
LVT	LUXURY VINYL TILE
LW	LIGHTWEIGHT
MAX	MAXIMUM
MDF	MEDIUM DENSITY FIBERBOARD
MECH	MECHANICAL
MEMB	MEMBRANE
MEP	MECHANICAL, ELECTRICAL, PLUMBING
MFR	MANUFACTURER
MIN	MINIMUM
MISC	MISCELLANEOUS
MO	MASONRY OPENING
MTD	MOUNTED
MTL	METAL
N	NORTH
NIC	NOT IN CONTRACT
NO	NUMBER
NOM	NOMINAL
NTS	NOT TO SCALE
O.P.	OVERFLOW PIPE
OC	ON CENTER
OD	OVERFLOW DRAIN
OFF	OFFICE
OH	OPPOSITE HAND
OPG	OPENING
OPP	OPPOSITE
(P)	PROPOSED
PERM	PERIMETER
PERP	PERPENDICULAR
PG	PAINT GRADE
PL	PLATE, PROPERTY LINE
PLAM	PLASTIC LAMINATE
PLBG	PLUMBING
PLYWD	PLYWOOD
PNL	PANEL
PP	POWER POLE
PR	PAIR
PRTN	PARTITION
PSF	POUNDS PER SQUARE FOOT
PSI	POUNDS PER SQUARE INCH
PSL	PARALLEL STRAND LUMBER
PT	PRESSURE TREATED
PTD	PAINTED
PV	PHOTO VOLTAIC
PVC	POLYVINYL CHLORIDE
PVMT	PAVEMENT
QTY	QUANTITY
R	RADIUS, RISER
RB	RUBBER BASE
RCP	REFLECTED CEILING PLAN
RD	ROOF DRAIN
REF	REFRIGERATOR
REINF	REINFORCED
REQD	REQUIRED
RH	RIGHT HAND
RM	ROOM
RO	ROUGH OPENING
RTU	ROOF TOP UNIT (MECH)
S	SOUTH
SAFB	SOUND ATTENUATION FIBER BATT
SAWP	SELF ADHEREING WATERPROOFING
SC	SCUPPER/SOLID CORE
SCHED	SCHEDULE
SEAL	SEALANT
SECT	SECTION
SF	SQUARE FOOT
SHT	SHEET
SHTHG	SHEATHING
SIM	SIMILAR
SM	SHEET METAL
SPEC	SPECIFICATION
SQ	SQURE
SS	SOLID SURFACE
SSTL	STAINLESS STEEL
STC	SOUND TRANSMISSION CLASS
STD	STANDARD
STL	STEEL
STOR	STORAGE
STRUCT	STRUCTURAL
SUSP	SUPSPENDED
SV	SHEET VINYL
SYM	SYMMMETRICAL
T	TREAD
T&G	TONGUE & GROOVE
TEL	TELEPHONE
TEMP	TEMPERED
TER	TERRAZZO
THK	THICK
THR	THRESHOLD
TJI	TRUSS JOIST I-JOIST
TO	TOP OF
TOS	TOP OF SLAB
TOW	TOP OF WALL
TRANS	TRANSFORMER
TV	TELEVISION
TYP	TYPICAL
UFAS	UNIFORM FEDERAL ACCESSIBILITY STANDARDS
UG	UNDERGROUND
UNFIN	UNFINISHED
UNO	ULNESS NOTED OTHERWISE
UV	UTRAVIOLET
VCT	VINYL COMPOSITION TILE
VERT	VERTICAL
VIF	VERIFY IN FIELD
VTR	VENT TERMINATION PIPE
VWC	VINYL WALL COVERING
W	WEST
W/	WITH
W/D	WASHER DRYER
W/O	WITHOUT
WC	WATERCLOSET
WD	WOOD
WDW	WINDOW
WH	WATER HEATER
WI	WROUGHT IRON
WIN	WINDOW
WP	WATERPROOF(ING)
WR	WEATHER RESISTIVE
WRB	WATER RESISTIVE BARRIER
WSCT	WAINSCOT
WT	WEIGHT
WWF	WELDED WIRE FABRIC
YD	YARD

SYMBOLS

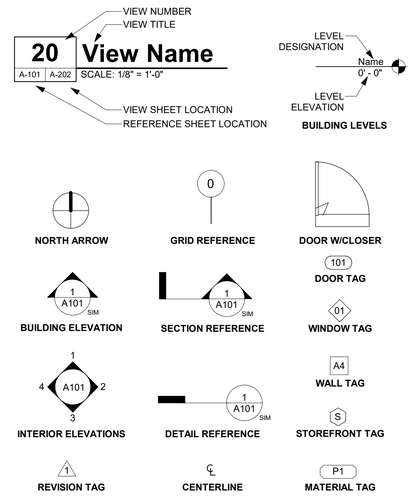

These plans are only to be used within City of Carpinteria jurisdiction. By using these standard plans ("ADU Plans") in accordance with the City of Carpinteria's Pre-Approved ADU Construction Plans Program, the User agrees to defend, indemnify, and hold harmless the City of Carpinteria and RRM from any and all claims, liabilities, suits, and demands on account of any injury, damage, or loss to persons or property, including injury or death, or economic losses, arising out of the use of these ADU Plans. The use of these ADU Plans does not eliminate or reduce the user's responsibility to verify any and all information herein.

CARPINTERIA ADU PROTOTYPES

SANTA BARBARA COUNTY, CA

GENERAL NOTES

DATE
0218/23

SHEET
G-102

5/11/2023 4:50:45 PM
C:\Users\mjenkins\OneDrive - RRM Design Group\Documents\2727-01 Carpinteria ADU_Public Set_mjenkins.rvt

2022 CALIFORNIA GREEN BUILDING STANDARDS CODE

RESIDENTIAL MANDATORY MEASURES (SHEET 1)

CHAPTER 1 - ADMINISTRATION

SECTION 101 GENERAL

101.1 TITLE.
THESE REGULATIONS SHALL BE KNOWN AS THE CALIFORNIA GREEN BUILDING STANDARDS CODE AND MAY BE CITED AS SUCH AND WILL BE REFERRED TO HEREIN AS "THIS CODE." IT IS INTENDED THAT IT SHALL ALSO BE KNOWN AS THE CALGREEN CODE. THE CALIFORNIA GREEN BUILDING STANDARDS CODE IS PART 11 OF THIRTEEN PARTS OF THE OFFICIAL COMPILATION AND PUBLICATION OF THE ADOPTION, AMENDMENT AND REPEAL OF BUILDING REGULATIONS TO THE CALIFORNIA CODE OF REGULATIONS, TITLE 24, ALSO REFERRED TO AS THE CALIFORNIA BUILDING STANDARDS CODE.

101.2 PURPOSE.
THE PURPOSE OF THIS CODE IS TO IMPROVE PUBLIC HEALTH, SAFETY AND GENERAL WELFARE BY ENHANCING THE DESIGN AND CONSTRUCTION OF BUILDINGS THROUGH THE USE OF BUILDING CONCEPTS HAVING A REDUCED NEGATIVE IMPACT OR POSITIVE ENVIRONMENTAL IMPACT AND ENCOURAGING SUSTAINABLE CONSTRUCTION PRACTICES IN THE FOLLOWING CATEGORIES:
1. PLANNING AND DESIGN.
2. ENERGY EFFICIENCY.
3. WATER EFFICIENCY AND CONSERVATION.
4. MATERIAL CONSERVATION AND RESOURCE EFFICIENCY.
5. ENVIRONMENTAL QUALITY.

101.3 SCOPE.
THE PROVISIONS OF THIS CODE SHALL APPLY TO THE PLANNING, DESIGN, OPERATION, CONSTRUCTION, USE AND OCCUPANCY OF EVERY NEWLY CONSTRUCTED BUILDING OR STRUCTURE, UNLESS OTHERWISE INDICATED IN THIS CODE, THROUGHOUT THE STATE OF CALIFORNIA.

IT IS NOT THE INTENT THAT THIS CODE SUBSTITUTE OR BE IDENTIFIED AS MEETING THE CERTIFICATION REQUIREMENTS OF ANY GREEN BUILDING PROGRAM.

SECTION 102 CONSTRUCTION DOCUMENTS AND INSTALLATION VERIFICATION

102.1 SUBMITTAL DOCUMENTS.
CONSTRUCTION DOCUMENTS AND OTHER DATA SHALL BE SUBMITTED IN ONE OR MORE SETS WITH EACH APPLICATION FOR A PERMIT. WHERE SPECIAL CONDITIONS EXIST, THE ENFORCING AGENCY IS AUTHORIZED TO REQUIRE ADDITIONAL CONSTRUCTION DOCUMENTS TO BE PREPARED BY A LICENSED DESIGN PROFESSIONAL AND MAY BE SUBMITTED SEPARATELY.

EXCEPTION: THE ENFORCING AGENCY IS AUTHORIZED TO WAIVE THE SUBMISSION OF CONSTRUCTION DOCUMENTS AND OTHER DATA NOT REQUIRED TO BE PREPARED BY A LICENSED DESIGN PROFESSIONAL.

102.2 INFORMATION ON CONSTRUCTION DOCUMENTS.
CONSTRUCTION DOCUMENTS SHALL BE OF SUFFICIENT CLARITY TO INDICATE THE LOCATION, NATURE AND SCOPE OF THE PROPOSED GREEN BUILDING FEATURE AND SHOW THAT IT WILL CONFORM TO THE PROVISIONS OF THIS CODE, THE CALIFORNIA BUILDING STANDARDS CODE AND OTHER RELEVANT LAWS, ORDINANCES, RULES AND REGULATIONS AS DETERMINED BY THE ENFORCING AGENCY.

102.3 VERIFICATION.
DOCUMENTATION OF CONFORMANCE FOR APPLICABLE GREEN BUILDING MEASURES SHALL BE PROVIDED TO THE ENFORCING AGENCY. ALTERNATE METHODS OF DOCUMENTATION SHALL BE ACCEPTABLE WHEN THE ENFORCING AGENCY FINDS THAT THE PROPOSED ALTERNATE DOCUMENTATION IS SATISFACTORY TO DEMONSTRATE SUBSTANTIAL CONFORMANCE WITH THE INTENT OF THE PROPOSED GREEN BUILDING MEASURE.

CHAPTER 3 - GREEN BUILDING

SECTION 301 GENERAL

301.1 SCOPE.
BUILDINGS SHALL BE DESIGNED TO INCLUDE THE GREEN BUILDING MEASURES SPECIFIED AS MANDATORY IN THE APPLICATION CHECKLISTS CONTAINED IN THIS CODE. VOLUNTARY GREEN BUILDING MEASURES ARE ALSO INCLUDED IN THE APPLICATION CHECKLISTS AND MAY BE INCLUDED IN THE DESIGN AND CONSTRUCTION OF STRUCTURES COVERED BY THIS CODE, BUT ARE NOT REQUIRED UNLESS ADOPTED BY A CITY, COUNTY, OR CITY AND COUNTY AS SPECIFIED IN SECTION 101.7.

301.1.1 ADDITIONS AND ALTERATIONS. [HCD] THE MANDATORY PROVISIONS OF CHAPTER 4 SHALL BE APPLIED TO ADDITIONS OR ALTERATIONS OF EXISTING RESIDENTIAL BUILDINGS WHERE THE ADDITION OR ALTERATION INCREASES THE BUILDING'S CONDITIONED AREA, VOLUME, OR SIZE. THE REQUIREMENTS SHALL APPLY ONLY TO AND/OR WITHIN THE SPECIFIC AREA OF THE ADDITION OR ALTERATION.

THE MANDATORY PROVISIONS OF SECTION 4.106.4.2 MAY APPLY TO ADDITIONS OR ALTERATIONS OF EXISTING PARKING FACILITIES OR THE ADDITION OF NEW PARKING FACILITIES SERVING EXISTING MULTIFAMILY BUILDINGS. SEE SECTION 4.106.4.3 FOR APPLICATION.

NOTE: REPAIRS INCLUDING, BUT NOT LIMITED TO, RESURFACING, RESTRIPING, AND REPAIRING OR MAINTAINING EXISTING LIGHTING FIXTURES ARE NOT CONSIDERED ALTERATIONS FOR THE PURPOSE OF THIS SECTION.

301.2 LOW-RISE AND HIGH-RISE RESIDENTIAL BUILDINGS [HCD].
THE PROVISIONS OF INDIVIDUAL SECTIONS OF CALGREEN MAY APPLY TO EITHER LOW-RISE RESIDENTIAL BUILDINGS, HIGH-RISE RESIDENTIAL BUILDINGS, OR BOTH. INDIVIDUAL SECTIONS WILL BE DESIGNATED BY BANNERS TO INDICATE WHERE THE SECTION APPLIES SPECIFICALLY TO LOW-RISE ONLY (LR) OR HIGH-RISE ONLY (HR). WHEN THE SECTION APPLIES TO BOTH LOW-RISE AND HIGH-RISE BUILDINGS, NO BANNER WILL BE USED.

CHAPTER 4 - RESIDENTIAL MANDATORY MEASURES

DIVISION 4.1 PLANNING AND DESIGN

4.106 SITE DEVELOPMENT

4.106.1 GENERAL.
PRESERVATION AND USE OF AVAILABLE NATURAL RESOURCES SHALL BE ACCOMPLISHED THROUGH EVALUATION AND CAREFUL PLANNING TO MINIMIZE NEGATIVE EFFECTS ON THE SITE AND ADJACENT AREAS. PRESERVATION OF SLOPES, MANAGEMENT OF STORM WATER DRAINAGE AND EROSION CONTROLS SHALL COMPLY WITH THIS SECTION.

4.106.2 STORM WATER DRAINAGE AND RETENTION DURING CONSTRUCTION
PROJECTS WHICH DISTURB LESS THAN ONE ACRE OF SOIL AND ARE NOT PART OF A LARGER COMMON PLAN OF DEVELOPMENT WHICH IN TOTAL DISTURBS ONE ACRE OR MORE, SHALL MANAGE STORM WATER DRAINAGE DURING CONSTRUCTION. IN ORDER TO MANAGE STORM WATER DRAINAGE DURING CONSTRUCTION, ONE OR MORE OF THE FOLLOWING MEASURES SHALL BE IMPLEMENTED TO PREVENT FLOODING OF ADJACENT PROPERTY, PREVENT EROSION AND RETAIN SOIL RUNOFF ON THE SITE.
1. RETENTION BASINS OF SUFFICIENT SIZE SHALL BE UTILIZED TO RETAIN STORM WATER ON THE SITE.
2. WHERE STORM WATER IS CONVEYED TO A PUBLIC DRAINAGE SYSTEM, COLLECTION POINT, GUTTER OR SIMILAR DISPOSAL METHOD, WATER SHALL BE FILTERED BY USE OF A BARRIER SYSTEM, WATTLE OR OTHER METHOD APPROVED BY THE ENFORCING AGENCY.
3. COMPLIANCE WITH A LAWFULLY ENACTED STORM WATER MANAGEMENT ORDINANCE.

4.106.3 GRADING AND PAVING
CONSTRUCTION PLANS SHALL INDICATE HOW THE SITE GRADING OR DRAINAGE SYSTEM WILL MANAGE ALL SURFACE WATER FLOWS TO KEEP WATER FROM ENTERING BUILDINGS. EXAMPLES OF METHODS TO MANAGE SURFACE WATER INCLUDE, BUT ARE NOT LIMITED TO, THE FOLLOWING:
1. SWALES
2. WATER COLLECTION AND DISPOSAL SYSTEMS
3. FRENCH DRAINS
4. WATER RETENTION GARDENS
5. OTHER WATER MEASURES WHICH KEEP SURFACE WATER AWAY FROM BUILDINGS AND AID IN GROUNDWATER RECHARGE.
EXCEPTIONS: ADDITIONS AND ALTERATIONS NOT ALTERING THE DRAINAGE PATH.

4.106.4.2 NEW MULTIFAMILY DWELLINGS, HOTELS AND MOTELS AND NEW RESIDENTIAL PARKING FACILITIES
WHEN PARKING IS PROVIDED, PARKING SPACES FOR NEW MULTIFAMILY DWELLINGS, HOTELS AND MOTELS SHALL MEET THE REQUIREMENTS OF SECTIONS 4.106.4.2.1 AND 4.106.4.2.2. CALCULATIONS FOR SPACES SHALL BE ROUNDED UP TO THE NEAREST WHOLE NUMBER. A PARKING SPACE SERVED BY ELECTRIC VEHICLE SUPPLY EQUIPMENT OR DESIGNED AS A FUTURE EV CHARGING SPACE SHALL COUNT AS AT LEAST ONE STANDARD AUTOMOBILE PARKING SPACE ONLY FOR THE PURPOSE OF COMPLYING WITH ANY APPLICABLE MINIMUM PARKING SPACE REQUIREMENTS ESTABLISHED BY A LOCAL JURISDICTION. SEE VEHICLE CODE SECTION 22511.2 FOR FURTHER DETAILS.

DIVISION 4.2 ENERGY EFFICIENCY

4.201 GENERAL

4.201.1 SCOPE.
FOR THE PURPOSES OF MANDATORY ENERGY EFFICIENCY STANDARDS IN THIS CODE, THE CALIFORNIA ENERGY COMMISSION WILL CONTINUE TO ADOPT MANDATORY STANDARDS.

DIVISION 4.3 WATER EFFICIENCY AND CONSERVATION

4.303 INDOOR WATER USE

4.303.1 WATER CONSERVING PLUMBING FIXTURES AND FITTINGS
PLUMBING FIXTURES (WATER CLOSETS AND URINALS) AND FITTINGS (FAUCETS AND SHOWERHEADS) SHALL COMPLY WITH THE FOLLOWING:

4.303.1.1 WATER CLOSETS
THE EFFECTIVE FLUSH VOLUME OF ALL WATER CLOSETS SHALL NOT EXCEED 1.28 GALLONS PER FLUSH. TANK-TYPE WATER CLOSETS SHALL BE CERTIFIED TO THE PERFORMANCE CRITERIA OF THE U.S. EPA WATERSENSE SPECIFICATION FOR TANK TYPE TOILET.

NOTE: THE EFFECTIVE FLUSH VOLUME OF DUAL FLUSH TOILETS IS DEFINED AS THE COMPOSITE, AVERAGE FLUSH VOLUME OF TWO REDUCED FLUSHES AND ONE FULL FLUSH.

4.303.1.2 URINALS
THE EFFECTIVE FLUSH VOLUME OF WALL-MOUNTED URINALS SHALL NOT EXCEED 0.125 GALLONS PER FLUSH. THE EFFECTIVE FLUSH VOLUME OF ALL OTHER URINALS SHALL NOT EXCEED 0.5 GALLONS PER FLUSH.

4.303.1.3 SHOWERHEADS
4.303.1.3.1 SINGLE SHOWERHEAD
SHOWERHEADS SHALL HAVE A MAXIMUM FLOW RATE OF NOT MORE THAN 1.8 GALLONS PER MINUTE AT 80 PSI. SHOWERHEADS SHALL BE CERTIFIED TO THE PERFORMANCE CRITERIA OF THE U.S. EPA WATERSENSE SPECIFICATION FOR SHOWERHEADS.

4.303.1.3.2 MULTIPLE SHOWERHEADS SERVING ONE SHOWER
WHEN A SHOWER IS SERVED BY MORE THAN ONE SHOWERHEAD, THE COMBINED FLOW RATE OF ALL SHOWERHEADS AND/OR OTHER SHOWER OUTLETS CONTROLLED BY A SINGLE VALVE SHALL NOT EXCEED 1.8 GALLONS PER MINUTE AT 80 PSI, OR THE SHOWER SHALL BE DESIGNED TO ALLOW ONLY ONE SHOWER OUTLET TO BE IN OPERATION AT A TIME.

NOTE: A HAND HELD SHOWER SHALL BE CONSIDERED A SHOWERHEAD.

4.303.1.4 FAUCETS
4.303.1.4.1 RESIDENTIAL LAVATORY FAUCETS
THE MAXIMUM FLOW RATE OF RESIDENTIAL LAVATORY FAUCETS SHALL NOT EXCEED 1.2 GALLONS PER MINUTE AT 60 PSI. THE MINIMUM FLOW RATE OF RESIDENTIAL LAVATORY FAUCETS SHALL NOT BE LESS THAN 0.8 GALLONS PER MINUTE AT 20 PSI.

4.303.1.4.2 LAVATORY FAUCETS IN COMMON AND PUBLIC USE AREAS
THE MAXIMUM FLOW RATE OF LAVATORY FAUCETS INSTALLED IN COMMON AND PUBLIC USE AREAS (OUTSIDE OF DWELLINGS OR SLEEPING UNITS) IN RESIDENTIAL BUILDINGS SHALL NOT EXCEED 0.5 GALLONS PER MINUTE AT 60 PSI.

4.303.1.4.3 METERING FAUCETS
METERING FAUCETS WHEN INSTALLED IN RESIDENTIAL BUILDINGS SHALL NOT DELIVER MORE THAN 0.2 GALLONS PER CYCLE.

4.303.1.4.4 KITCHEN FAUCETS
THE MAXIMUM FLOW RATE OF KITCHEN FAUCETS SHALL NOT EXCEED 1.8 GALLONS PER MINUTE AT 60 PSI. KITCHEN FAUCETS MAY TEMPORARILY INCREASE THE FLOW ABOVE THE MAXIMUM RATE, BUT NOT TO EXCEED 2.2 GALLONS PER MINUTE AT 60 PSI, AND MUST DEFAULT TO A MAXIMUM FLOW RATE OF 1.8 GALLONS PER MINUTE AT 60 PSI.

NOTE: WHERE COMPLYING FAUCETS ARE UNAVAILABLE, AERATORS OR OTHER MEANS MAY BE USED TO ACHIEVE REDUCTION.

4.303.3 STANDARDS FOR PLUMBING FIXTURES AND FITTINGS
PLUMBING FIXTURES AND FITTINGS SHALL BE INSTALLED IN ACCORDANCE WITH THE CALIFORNIA PLUMBING CODE, AND SHALL MEET THE APPLICABLE STANDARDS REFERENCED IN TABLE 1701.1 OF THE CALIFORNIA PLUMBING CODE.

NOTE:
THIS TABLE COMPILES THE DATA IN SECTION 4.303.1 AND IS INCLUDED AS A CONVENIENCE FOR THE USER.

TABLE - MAXIMUM FIXTURE WATER USE

FIXTURE TYPE	FLOW RATE
SHOWER HEADS (RESIDENTIAL)	1.8 GMP @ 80 PSI
LAVATORY FAUCETS (RESIDENTIAL)	MAX. 1.2 GPM @ 60 PSI MIN. 0.8 GPM @ 20 PSI
LAVATORY FAUCETS IN COMMON & PUBLIC USE AREAS	0.5 GPM @ 60 PSI
KITCHEN FAUCETS	1.8 GPM @ 60 PSI
METERING FAUCETS	0.2 GAL/CYCLE
WATER CLOSET	1.28 GAL/FLUSH
URINALS	0.125 GAL/FLUSH

4.304 OUTDOOR WATER USE

DIVISION 4.4 MATERIAL CONSERVATION AND RESOURCE EFFICIENCY

4.406 ENHANCED DURABILITY AND REDUCED MAINTENANCE

4.406.1 RODENT PROOFING
ANNULAR SPACES AROUND PIPES, ELECTRIC CABLES, CONDUITS OR OTHER OPENINGS IN SOLE/BOTTOM PLATES AT EXTERIOR WALLS SHALL BE PROTECTED AGAINST THE PASSAGE OF RODENTS BY LCOSING SUCH OPENINGS WITH CEMENT MORTAR, CONCRETE MASONRY OR A SIMILAR METHOD ACCEPTABLE TO THE ENFORCING AGENCY.

4.408 CONSTRUCTION WASTE REDUCTION, DISPOSAL AND RECYCLING

4.408.1 CONSTRUCTION WASTE MANAGEMENT
RECYCLE AND/OR SALVAGE FOR REUSE A MINIMUM OF 65 PERCENT OF THE NONHAZARDOUS CONSTRUCTION AND DEMOLITION WASTE IN ACCORDANCE WITH EITHER SECTION 4.408.2, 4.408.3, OR 4.408.4, OR MEET A MORE STRINGENT LOCAL CONSTRUCTION AND DEMOLITION WASTE MANAGEMENT ORDINANCE.

EXCEPTIONS:
1. EXCAVATED SOIL AND LAND-CLEARING DEBRIS.
2. ALTERNATE WASTE REDUCTION METHODS DEVELOPED BY WORKING WITH LOCAL AGENCIES IF DIVERSION OR RECYCLE FACILITIES CAPABLE OF COMPLIANCE WITH THIS ITEM DO NOT EXIST OR ARE NOT LOCATED REASONABLY CLOSE TO THE JOBSITE.
3. THE ENFORCING AGENCY MAY MAKE ACCEPTIONS TO THE REQUIREMENTS OF THIS SECTION WHEN ISOLATED JOBSITES ARE LOCATED IN AREAS BEYOND THE HAUL BOUNDARIES OF THE DIVERSION FACILITY.

4.408.2 CONSTRUCTION WASTE MANAGEMENT PLAN
SUBMIT A CONSTRUCTION WASTE MANAGEMENT PLAN IN COMFORMANCE WITH ITEMS 1 THROUGH 5. THE CONSTRUCTION WASTE MANAGEMENT PLAN SHALL BE UPDATED AS NECESSARY AND SHALL BE AVAILABLE DURING CONSTRUCTION FOR EXAMINATION BY THE ENFORCING AGENCY.
1. IDENTIFY THE CONSTRUCTION AND DEMOLITION WASTE MATERIALS TO BE DIVERTED FROM DISPOSAL BY RECYCLING, REUSE ON THE PROJECT OR SALVAGE FOR FUTURE USE OR SALE.
2. SPECIFY IF CONSTRUCTION AND DEMOLITION WASTE MATERIALS WILL BE SORTED ON-SITE (SOURCE-SEPARATED) OR BULK MIXED (SINGLE STREAM).
3. IDENTIFY DIVERSION FACILITIES WHERE THE CONSTRUCTION AND DEMOLITION WASTE MATERIAL WILL BE TAKEN.
4. IDENTIFY CONSTRUCTION METHODS EMPLOYED TO REDUCE THE AMOUNT OF CONSTRUCTION AND DEMOLITION WASTE GENERATED.
5. SPECIFY THAT THE AMOUNT OF CONSTRUCTION AND DEMOLITION WASTE MATERIAL DIVERTED SHALL BE CALCULATED BY WEIGHT OR VOLUME, BUT NOT BY BOTH.

4.408.3 WASTE MANAGEMENT COMPANY.
UTILIZE A WASTE MANAGEMENT COMPANY, APPROVED BY THE ENFORCING AGENCY, WHICH CAN PROVIDE VERIFIABLE DOCUMENTATION THAT THE PERCENTAGE OF CONSTRUCTION AND DEMOLITION WASTE MATERIAL DIVERTED FROM THE LANDFILL COMPLIES WITH SECTION 4.408.1.
NOTE: THE OWNER OR CONTRACTOR MAY MAKE THE DETERMINATION IF THE CONSTRUCTION AND DEMOLITION WASTE MATERIALS WILL BE DIVERTED BY A WASTE MANAGEMENT COMPANY.

4.408.4 WASTE STREAM REDUCTION ALTERNATIVE [LR].
PROJECTS THAT GENERATE A TOTAL COMBINED WEIGHT OF CONSTRUCTION AND DEMOLITION WASTE DISPOSED OF IN LANDFILLS, WHICH DO NOT EXCEED 3.4 POUNDS PER SQUARE FOOT OF THE BUILDING AREA SHALL MEET THE MINIMUM 65 PERCENT CONSTRUCTION WASTE REDUCTION REQUIREMENT IN SECTION 4.408.1.

4.408.4.1 WASTE STREAM REDUCTION ALTERNATIVE.
PROJECTS THAT GENERATE A TOTAL COMBINED WEIGHT OF CONSTRUCTION AND DEMOLITION WASTE DISPOSED OF IN LANDFILLS, WHICH DO NOT EXCEED 2 POUNDS PER SQUARE FOOT OF THE BUILDING AREA, SHALL MEET THE MINIMUM 65-PERCENT CONSTRUCTION WASTE REDUCTION REQUIREMENT IN SECTION 4.408.1.

4.408.5 DOCUMENTATION
DOCUMENTATION SHALL BE PROVIDED TO THE ENFORCING AGENCY WHICH DEMONSTRATES COMPLIANCE WITH SECTION 4.408.2, ITEMS 1 THOUGH 5, SECTION 4.408.3 OR SECTION 4.408.4
NOTES:
1. SAMPLE FORMS FOUND IN "A GUIDE TO THE CALIFORNIA GREEN BUILDING STANDARDS CODE (RESIDENTIAL)" LOCATED AT WWW.HCD.CA.GOV/CALGREEN.HTML MAY BE USED TO ASSIST IN DOCUMENTING COMPLIANCE WITH THIS SECTION.
2. MIXED CONSTRUCTION AND DEMOLITION DEBRIS (C&D) PROCESSORS CAN BE LOCATED AT THE CALIFORNIA DEPARTMENT OF RESOURCES RECYCLING AND RECOVERY (CALRECYCLE).

These plans are only to be used within City of Carpinteria jurisdiction. By using these standard plans ("ADU Plans") in accordance with the City of Carpinteria's Pre-Approved ADU Construction Plans Program, the User agrees to defend, indemnify, and hold harmless the City of Carpinteria and RRM from any and all claims, liabilities, suits, and demands on account of any injury, damage, or loss to persons or property, including injury or death, or economic losses, arising out of the use of these ADU Plans. The use of these ADU Plans does not eliminate or reduce the user's responsibility to verify any and all information herein.

CARPINTERIA ADU PROTOTYPES
SANTA BARBARA COUNTY, CA
CAL GREEN REQUIREMENTS

DATE
0218/23

SHEET
G-201

5/11/2023 4:50:45 PM
C:\Users\mjenkins\OneDrive - RRM Design Group\Documents\2727-01 Carpinteria ADU_Public Set_mjenkins.rvt

2022 CALIFORNIA GREEN BUILDING STANDARDS CODE

RESIDENTIAL MANDATORY MEASURES (SHEET 2)

4.410 BUILDING MAINTENANCE AND OPERATION

4.410.1 OPERATION AND MAINTENANCE MANUAL
AT THE TIME OF FINAL INSPECTION, A MANUAL, COMPACT DISC, WEB-BASED REFERENCE OR OTHER MEDIA ACCEPTABLE TO THE ENFORCING AGENCY WHICH INCLUDES ALL OF THE FOLLOWING SHALL BE PLACED IN THE BUILDING:

1. DIRECTIONS TO THE OWNER OR OCCUPANT THAT THE MANUAL SHALL REMAIN WITH THE BUILDING THROUGHOUT THE LIFE CYCLE OF THE STRUCTURE.
2. OPERATION AND MAINTENANCE INSTRUCTIONS FOR THE FOLLOWING:
   a. EQUIPMENT AND APPLIANCES, INCLUDING WATER-SAVING DEVICES AND SYSTEMS, HVAC SYSTEMS, PHOTOVOLTAIC SYSTEMS, ELECTRIC VEHICLE CHARGERS, WATER-HEATING SYSTEMS AND OTHER MAJOR APPLIANCES AND EQUIPMENT.
   b. ROOF AND YARD DRAINAGE, INCLUDING GUTTERS AND DOWNSPOUTS .
   c. SPACE CONDITIONING SYSTEMS, INCLUDING CONDENSERS AND AIR FILTERS.
   d. LANDSCAPE IRRIGATION SYSTEMS.
   e. WATER REUSE SYSTEMS.
3. INFORMATION FROM LOCAL UTILITY, WATER AND WASTE RECOVERY PROVIDERS ON METHODS TO FURTHER REDUCE RESOURCE CONSUMPTION, INCLUDING RECYCLE PROGRAMS AND LOCATIONS.
4. PUBLIC TRANSPORTATION AND/OR CARPOOL OPTIONS AVAILABLE IN THE AREA.
5. EDUCATIONAL MATERIAL ON THE POSITIVE IMPACTS OF AN INTERIOR RELATIVE HUMIDITY BETWEEN 30–60 PERCENT AND WHAT METHODS AN OCCUPANT MAY USE TO MAINTAIN THE RELATIVE HUMIDITY LEVEL IN THAT RANGE.
6. INFORMATION ABOUT WATER-CONSERVING LANDSCAPE AND IRRIGATION DESIGN AND CONTROLLERS WHICH CONSERVE WATER.
7. INSTRUCTIONS FOR MAINTAINING GUTTERS AND DOWNSPOUTS AND THE IMPORTANCE OF DIVERTING WATER AT LEAST 5 FEET AWAY FROM THE FOUNDATION
8. INFORMATION ON REQUIRED ROUTINE MAINTENANCE MEASURES, INCLUDING, BUT NOT LIMITED TO, CAULKING, PAINTING, GRADING AROUND THE BUILDING, ETC.
9. INFORMATION ABOUT STATE SOLAR ENERGY AND INCENTIVE PROGRAMS AVAILABLE.
10. A COPY OF ALL SPECIAL INSPECTION VERIFICATIONS REQUIRED BY THE ENFORCING AGENCY OR THIS CODE.
11. INFORMATION FROM CAL FIRE ON MAINTENANCE OF DEFENSIBLE SPACE AROUND RESIDENTIAL STRUCTURES.
12. INFORMATION AND/OR DRAWINGS IDENTIFYING THE LOCATION OF GRAB BAR REINFORCEMENTS.

DIVISION 4.5 ENVIROMENTAL QUALITY

4.501 GENERAL

4.501.1 SCOPE
THE PROVISIONS OF THIS CHAPTER SHALL OUTLINE MEANS OF REDUCING THE QUANTITY OF AIR CONTAMINANTS THAT ARE ODOROUS, IRRITATING AND/OR HARMFUL TO THE COMFORT AND WELL-BEING OF A BUILDING'S INSTALLERS, OCCUPANTS AND NEIGHBORS.

4.503 FIREPLACES

4.503.1 GENERAL
ANY INSTALLED GAS FIREPLACE SHALL BE A DIRECT-VENT SEALED-COMBUSTION TYPE. ANY INSTALLED WOODSTOVE OR PELLET STOVE SHALL COMPLY WITH U.S. EPA NEW SOURCE PERFORMANCE STANDARDS (NSPS) EMISSION LIMITS AS APPLICABLE, AND SHALL HAVE A PERMANENT LABEL INDICATING THEY ARE CERTIFIED TO MEET THE EMISSION LIMITS. WOODSTOVES, PELLET STOVES AND FIREPLACES SHALL ALSO COMPLY WITH APPLICABLE LOCAL ORDINANCES.

4.504 POLLUTANT CONTROL

4.504.1 COVERING OF DUCT OPENINGS AND PROTECTION OF MECHANICAL EQUIPMENT DURING CONSTRUCTION
AT THE TIME OF ROUGH INSTALLATION, DURING STORAGE ON THE CONSTRUCTION SITE AND UNTIL FINAL STARTUP OF THE HEATING, COOLING AND VENTILATING EQUIPMENT, ALL DUCT AND OTHER RELATED AIR DISTRIBUTION COMPONENT OPENINGS SHALL BE COVERED WITH TAPE, PLASTIC, SHEETMETAL OR OTHER METHODS ACCEPTABLE TO THE ENFORCING AGENCY TO REDUCE THE AMOUNT OF WATER, DUST AND DEBRIS, WHICH MAY ENTER THE SYSTEM.

4.504.2 FINISH MATERIAL POLLUTANT CONTROL
FINISH MATERIALS SHALL COMPLY WITH THIS SECTION.

4.504.2.1 ADHESIVES, SEALANTS AND CAULKS
ADHESIVES, SEALANTS AND CAULKS USED ON THE PROJECT SHALL MEET THE REQUIREMENTS OF THE FOLLOWING STANDARDS UNLESS MORE STRINGENT LOCAL OR REGIONAL AIR POLLUTION OR AIR QUALITY MANAGEMENT DISTRICT RULES APPLY:

1. ADHESIVES, ADHESIVE BONDING PRIMERS, ADHESIVE PRIMERS, SEALANTS, SEALANT PRIMERS, AND CAULKS SHALL COMPLY WITH LOCAL OR REGIONAL AIR POLLUTION CONTROL OR AIR QUALITY MANAGEMENT DISTRICT RULES WHERE APPLICABLE OR SCAQMD RULE 1168 VOC LIMITS, AS SHOWN IN TABLE 4.504.1 OR 4.504.2, AS APPLICABLE. SUCH PRODUCTS ALSO SHALL COMPLY WITH THE RULE 1168 PROHIBITION ON THE USE OF CERTAIN TOXIC COMPOUNDS (CHLOROFORM, ETHYLENE DICHLORIDE, METHYLENE CHLORIDE, PERCHLOROETHYLENE AND TRICHLOROETHYLENE), EXCEPT FOR AEROSOL PRODUCTS, AS SPECIFIED IN SUBSECTION 2 BELOW.
2. AEROSOL ADHESIVES, AND SMALLER UNIT SIZES OF ADHESIVES, AND SEALANT OR CAULKING COMPOUNDS (IN UNITS OF PRODUCT, LESS PACKAGING, WHICH DO NOT WEIGH MORE THAN 1 POUND AND DO NOT CONSIST OF MORE THAN 16 FLUID OUNCES) SHALL COMPLY WITH STATEWIDE VOC STANDARDS AND OTHER REQUIREMENTS, INCLUDING PROHIBITIONS ON USE OF CERTAIN TOXIC COMPOUNDS, OF CALIFORNIA CODE OF REGULATIONS, TITLE 17, COMMENCING WITH SECTION 94507.

4.504.2.2 PAINTS AND COATINGS
ARCHITECTURAL PAINTS AND COATINGS SHALL COMPLY WITH VOC LIMITS IN TABLE 1 OF THE ARB ARCHITECTURAL SUGGESTED CONTROL MEASURE, AS SHOWN IN TABLE 4.504.3, UNLESS MORE STRINGENT LOCAL LIMITS APPLY. THE VOC CONTENT LIMIT FOR COATINGS THAT DO NOT MEET THE DEFINITIONS FOR THE SPECIALTY COATINGS CATEGORIES LISTED IN TABLE 4.504.3 SHALL BE DETERMINED BY CLASSIFYING THE COATING AS A FLAT, NONFLAT OR NONFLAT-HIGH GLOSS COATING, BASED ON ITS GLOSS, AS DEFINED IN SUBSECTIONS 4.21, 4.36, AND 4.37 OF THE 2007 CALIFORNIA AIR RESOURCES BOARD, SUGGESTED CONTROL MEASURE, AND THE CORRESPONDING FLAT, NONFLAT OR NONFLAT-HIGH GLOSS VOC LIMIT IN TABLE 4.504.3 SHALL APPLY.

4.504.2.3 AEROSOL PAINTS AND COATINGS
AEROSOL PAINTS AND COATINGS SHALL MEET THE PRODUCT-WEIGHTED MIR LIMITS FOR ROC IN SECTION 94522(A)(2) AND OTHER REQUIREMENTS, INCLUDING PROHIBITIONS ON USE OF CERTAIN TOXIC COMPOUNDS AND OZONE DEPLETING SUBSTANCES, IN SECTIONS 94522(E)(1) AND (F)(1) OF CALIFORNIA CODE OF REGULATIONS, TITLE 17, COMMENCING WITH SECTION 94520; AND IN AREAS UNDER THE JURISDICTION OF THE BAY AREA AIR QUALITY MANAGEMENT DISTRICT ADDITIONALLY COMPLY WITH THE PERCENT VOC BY WEIGHT OF PRODUCT LIMITS OF REGULATION 8, RULE 49.

4.504.2.4 VERIFICATION
VERIFICATION OF COMPLIANCE WITH THIS SECTION SHALL BE PROVIDED AT THE REQUEST OF THE ENFORCING AGENCY. DOCUMENTATION MAY INCLUDE, BUT IS NOT LIMITED TO, THE FOLLOWING:

1. MANUFACTURER'S PRODUCT SPECIFICATION.
2. FIELD VERIFICATION OF ON-SITE PRODUCT CONTAINERS.

4.504.3 CARPET SYSTEMS

4.504.3.1 CARPET CUSHION
ALL CARPET CUSHION INSTALLED IN THE BUILDING INTERIOR SHALL MEET THE REQUIREMENTS OF THE CALIFORNIA DEPARTMENT OF PUBLIC HEALTH, "STANDARD METHOD FOR THE TESTING AND EVALUATION OF VOLATILE ORGANIC CHEMICAL EMISSIONS FROM INDOOR SOURCES USING ENVIRONMENTAL CHAMBERS," VERSION 1.2, JANUARY 2017 (EMISSION TESTING METHOD FOR CALIFORNIA SPECIFICATION 01350).

SEE CALIFORNIA DEPARTMENT OF PUBLIC HEALTH'S WEBSITE FOR CERTIFICATION PROGRAMS AND TESTING LABS.

HTTPS://WWW.CDPH.CA.GOV/PROGRAMS/CCDPHP/DEODC/EHLB/IAQ/PAGES/VOC.ASPX

4.504.3.2 CARPET ADHESIVE
ALL CARPET ADHESIVE SHALL MEET THE REQUIREMENTS OF TABLE 4.504.1.

4.504.4 RESILIENT FLOORING SYSTEMS
WHERE RESILIENT FLOORING IS INSTALLED, AT LEAST 80 PERCENT OF FLOOR AREA RECEIVING RESILIENT FLOORING SHALL MEET THE REQUIREMENTS OF THE CALIFORNIA DEPARTMENT OF PUBLIC HEALTH, "STANDARD METHOD FOR THE TESTING AND EVALUATION OF VOLATILE ORGANIC CHEMICAL EMISSIONS FROM INDOOR SOURCES USING ENVIRONMENTAL CHAMBERS," VERSION 1.2, JANUARY 2017 (EMISSION TESTING METHOD FOR CALIFORNIA SPECIFICATION 01350).

SEE CALIFORNIA DEPARTMENT OF PUBLIC HEALTH'S WEBSITE FOR CERTIFICATION PROGRAMS AND TESTING LABS.

HTTPS://WWW.CDPH.CA.GOV/PROGRAMS/CCDPHP/DEODC/EHLB/IAQ/PAGES/VOC.ASPX

4.504.5 COMPOSITE WOOD PRODUCTS
HARDWOOD PLYWOOD, PARTICLEBOARD AND MEDIUM DENSITY FIBERBOARD COMPOSITE WOOD PRODUCTS USED ON THE INTERIOR OR EXTERIOR OF THE BUILDING SHALL MEET THE REQUIREMENTS FOR FORMALDEHYDE AS SPECIFIED IN ARB'S AIR TOXICS CONTROL MEASURE FOR COMPOSITE WOOD (17 CCR 93120 ET SEQ.) AS SHOWN IN TABLE 4.504.5.

4.504.5.1 DOCUMENTATION
VERIFICATION OF COMPLIANCE WITH THIS SECTION SHALL BE PROVIDED AS REQUESTED BY THE ENFORCING AGENCY. DOCUMENTATION SHALL INCLUDE AT LEAST ONE OF THE FOLLOWING:

1. PRODUCT CERTIFICATIONS AND SPECIFICATIONS.
2. CHAIN OF CUSTODY CERTIFICATIONS.
3. PRODUCT LABELED AND INVOICED AS MEETING THE COMPOSITE WOOD PRODUCTS REGULATION (SEE CCR, TITLE 17, SECTION 93120, ET SEQ.).
4. EXTERIOR GRADE PRODUCTS MARKED AS MEETING THE PS-1 OR PS-2 STANDARDS OF THE ENGINEERED WOOD ASSOCIATION, THE AUSTRALIAN AS/NZS 2269, EUROPEAN 636 3S, AND CANADIAN CSA O121, CSA O151, CSA O153 AND CSA O325 STANDARDS.
5. OTHER METHODS ACCEPTABLE TO THE ENFORCING AGENCY.

TABLE 4.504.1 - ADHESIVE VOC LIMIT
(LESS WATER AND LESS EXEMPT COMPOUNDS IN GRAMS PER LITER)

ARCHITECTURAL APPLICATIONS	CURRENT VOC LIMIT
INDOOR CARPET ADHESIVES	50
CARPET PAD ADHESIVES	50
OUTDOOR CARPET ADHESIVES	150
WOOD FLOORING ADHESIVES	100
RUBBER FLOORING ADHESIVES	60
SUBFLOOR ADHESIVES	50
CERAMIC TILE ADHESIVES	65
VCT AND ASPHALT TILE ADHESIVES	50
DRYWALL AND PANEL ADHESIVES	50
COVE BASE ADHESIVES	50
MULTIPURPOSE CONSTRUCTION ADHESIVES	70
STRUCTURAL GLAZING ADHESIVES	100
SINGLE-PLY ROOF MEMBRANE ADHESIVES	250
OTHER ADHESIVES NOT SPECIFICALLY LISTED	50
SPECIALTY APPLICATIONS	**CURRENT VOC LIMIT**
PVC WELDING	510
CPVC WELDING	490
ABD WELDING	325
PLASTIC CEMENT WELDING	250
ADHESIVE PRIMER FOR PLASTIC	550
CONTACT ADHESIVE	80
SPECIAL PURPOSE CONTACT ADHESIVE	250
STRUCTURAL WOOD MEMBER ADHESIVE	140
TOP AND TRIM ADHESIVES	250
SUBSTRATE SPECIFIC APPLICATIONS	**CURRENT VOC LIMIT**
METAL TO METAL	30
PLASTIC FOAMS	50
POROUS MATERIAL (EXCEPT WOOD)	50
WOOD	30
FIBERGLASS	80

1. IF AN ADHESIVE IS USED TO BOND DISSIMILAR SUBSTRATES TOGETHER, THE ADHESIVE WITH THE HIGHEST VOC CONTENT SHALL BE ALLOWED.
2. FOR ADDITIONAL INFORMATION REGARDING METHODS TO MEASURE THE VOC CONTENT SPECIFIED IN THIS TABLE, SEE SOUTH COAST AIR QUALITY MANAGEMENT DISTRICT RULE 1168.

TABLE 4.504.2 - SEALANT VOC LIMIT
(LESS WATER AND LESS EXEMPT COMPOUNDS IN GRAMS PER LITER)

SEALANTS	CURRENT VOC LIMIT
ARCHITECTURAL	250
MARINE DECK	760
NONMEMBRANE ROOF	300
ROADWAY	250
SINGLE-PLY ROOF MEMBRANE	450
OTHER	420
SEALANT PRIMERS	**CURRENT VOC LIMIT**
ARCHITECTURAL	
NONPOROUS	250
POROUS	250
MODIFIED BITUMINOUS	500
MARINE DECK	760
OTHER	750

TABLE 4.504.3 - VOC CONTENT LIMITS FOR ARCHITECTURAL COATINGS[2, 3]
GRAMS OF VOC PER LITER OF COATING, LESS WATER AND LESS EXEMPT COMPOUNDS)

COATING CATEGORY	CURRENT VOC LIMIT
FLAT COATINGS	50
NONFLAT COATINGS	100
NONFLAT-HIGH GLOSS COATINGS	150
SPECIALTY COATINGS	**CURRENT VOC LIMIT**
ALUMINUM ROOF COATINGS	400
BASEMENT SPECIALTY COATINGS	400
BITUMINOUS ROOF COATINGS	50
BITUMINOUS ROOF PRIMERS	350
BOND BREAKERS	350
CONCRETE CURING COMPOUNDS	350
CONCRETE/MASONRY SEALERS	100
DRIVEWAY SEALERS	50
DRY FOG COATINGS	150
FAUX FINISHING COATINGS	350
FIRE RESISTIVE COATINGS	350
FLOOR COATINGS	100
FORM-RELEASE COMPOUNDS	250
GRAPHIC ARTS COATINGS (SIGN PAINTS)	500
HIGH TEMPERATURE COATINGS	420
IDUSTRIAL MAINTENANCE COATINGS	250
LOW SOLIDS COATINGS[1]	120
MAGNESITE CEMENT COATINGS	450
MASTIC TEXTURE COATINGS	100
METALLIC PIGMENTED COATINGS	500
MULTICOLOR COATINGS	250
PRETREATMENT WASH PRIMERS	420
PRIMERS, SEALERS, AND UNDERCOATERS	100
REACTIVE PENETRATING SEALERS	350
RECYCLED COATINGS	250
ROOF COATINGS	50
RUST PREVENTATIVE COATINGS	250
SHELLACS	
CLEAR	730
OPAQUE	550
SPECIALTY PRIMERS, SEALERS AND UNDERCOATERS	100
STAINS	250
STONE CONSOLIDANTS	450
SWIMMING POOL COATINGS	340
TRAFFIC MARKING COATINGS	100
TUB AND TILE REFINISH COATINGS	420
WATERPROOFING MEMBRANES	250
WOOD COATINGS	275
WOOD PRESERVATIVES	350
ZINC-RICH PRIMERS	340

1. GRAMS OF VOC PER LITER OF COATING, INCLUDING WATER AND INCLUDING EXEMPT COMPOUNDS.
2. THE SPECIFIED LIMITS REMAIN IN EFFECT ENLESS REVISED LIMITS ARE LISTED IN SUBSEQUENT COLUMNS IN THE TABLE
3. VALUES IN THIS TABLE ARE DERIVED FROM THOSE SPECIFIED BY THE CALIFORNIA AIR RESOURCES BOARD, ARCHITECTURAL COATINGS SUGGESTED CONTROL MEASURE, FEBUARY 1, 2008. MORE INFORMATION IS AVAILABLE FROM THE AIR RESOURCES BOARD.

TABLE 4.504.5 - FORMALDEHYDE LIMITS[1]
(MAXIMUM FORMALDEHYDE EMISSIONS IN PARTS PER MILLION)

PRODUCT	CURRENT LIMIT
HARDWOOD PLYWOOD VENEER CORE	0.05
HARDWOOD PLYWOOD COMPOSITE CORE	0.05
PARTICLEBOARD	0.09
MEDIUM DENSITY FIBERBOARD	0.11
THIN MEDIUM DENSITY FIBERBOARD[2]	0.13

1. VALUES IN THIS TABLE ARE DERIVED FROM THOSE SPECIFIED BY THE CALIFORNIA AIR RESOURCES BOARD, AIR TOXICS CONTROL MEASURE FOR COMPOSITE WOOD AS TESTED IN ACCORDANCE WITH ASTM E1333. FOR ADDITIONAL INFORMATION, SEE CALIFORNIA CODE OF REGULATIONS, TITLE 17, SECTIONS 93120 THROUGH 93120.12.
2. THIN MEDIUM DENSITY FIBERBOARD HAS A MAXIMUM THICKNESS OF 5/16 INCH (8MM).

DIVISION 4.5 ENVIORNMENTAL QUALITY CONTINUED

4.505 INTERIOR MOISTURE CONTROL

4.505.1 GENERAL
BUILDINGS SHALL MEET OR EXCEED THE PROVISIONS OF THE CALIFORNIA BUILDING STANDARDS CODE.

4.505.2 CONCRETE SLAB FOUNDATIONS
CONCRETE SLAB FOUNDATIONS REQUIRED TO HAVE A VAPOR RETARDER BY THE CALIFORNIA BUILDING CODE CHAPTER 19 OR CONCRETE SLAB-ON-GROUND FLOORS REQUIRED TO HAVE A VAPOR RETARDER BY THE CALIFORNIA RESIDENTIAL CODE, CHAPTER 5, SHALL ALSO COMPLY WITH THIS SECTION.

4.505.2.1 CAPILLARY BREAK
A CAPILLARY BREAK SHALL BE INSTALLED IN COMPLIANCE WITH AT LEAST ONE OF THE FOLLOWING:

1. A 4-INCH-THICK (101.6 MM) BASE OF 1/2 INCH (12.7 MM) OR LARGER CLEAN AGGREGATE SHALL BE PROVIDED WITH A VAPOR RETARDER IN DIRECT CONTACT WITH CONCRETE AND A CONCRETE MIX DESIGN, WHICH WILL ADDRESS BLEEDING, SHRINKAGE, AND CURLING, SHALL BE USED. FOR ADDITIONAL INFORMATION, SEE AMERICAN CONCRETE INSTITUTE, ACI 302.2R-06.
2. OTHER EQUIVALENT METHODS APPROVED BY THE ENFORCING AGENCY.
3. A SLAB DESIGN SPECIFIED BY A LICENSED DESIGN PROFESSIONAL.

4.505.3 MOISTURE CONTENT OF A BUILDING
BUILDING MATERIALS WITH VISIBLE SIGNS OF WATER DAMAGE SHALL NOT BE INSTALLED. WALL AND FLOOR FRAMING SHALL NOT BE ENCLOSED WHEN THE FRAMING MEMBERS EXCEED 19-PERCENT MOISTURE CONTENT. MOISTURE CONTENT SHALL BE VERIFIED IN COMPLIANCE WITH THE FOLLOWING:

1. MOISTURE CONTENT SHALL BE DETERMINED WITH EITHER A PROBE-TYPE OR CONTACT-TYPE MOISTURE METER. EQUIVALENT MOISTURE VERIFICATION METHODS MAY BE APPROVED BY THE ENFORCING AGENCY AND SHALL SATISFY REQUIREMENTS FOUND IN SECTION 101.8 OF THIS CODE.
2. MOISTURE READINGS SHALL BE TAKEN AT A POINT 2 FEET (610 MM) TO 4 FEET (1219 MM) FROM THE GRADE STAMPED END OF EACH PIECE TO BE VERIFIED.
3. AT LEAST THREE RANDOM MOISTURE READINGS SHALL BE PERFORMED ON WALL AND FLOOR FRAMING WITH DOCUMENTATION ACCEPTABLE TO THE ENFORCING AGENCY PROVIDED AT THE TIME OF APPROVAL TO ENCLOSE THE WALL AND FLOOR FRAMING.

INSULATION PRODUCTS WHICH ARE VISIBLY WET OR HAVE A HIGH MOISTURE CONTENT SHALL BE REPLACED OR ALLOWED TO DRY PRIOR TO ENCLOSURE IN WALL OR FLOOR CAVITIES. WET-APPLIED INSULATION PRODUCTS SHALL FOLLOW THE MANUFACTURERS' DRYING RECOMMENDATIONS PRIOR TO ENCLOSURE.

4.506 INDOOR AIR QUALITY AND EXHAUST

4.506.1 BATHROOM EXHAUST FANS
EACH BATHROOM SHALL BE MECHANICALLY VENTILATED AND SHALL COMPLY WITH THE FOLLOWING:

1. FANS SHALL BE ENERGY STAR COMPLIANT AND BE DUCTED TO TERMINATE OUTSIDE THE BUILDING.
2. UNLESS FUNCTIONING AS A COMPONENT OF A WHOLE HOUSE VENTILATION SYSTEM, FANS MUST BE CONTROLLED BY A HUMIDITY CONTROL.
   a. HUMIDITY CONTROLS SHALL BE CAPABLE OF ADJUSTMENT BETWEEN A RELATIVE HUMIDITY RANGE OF ≤ 50 PERCENT TO A MAXIMUM OF 80 PERCENT. A HUMIDITY CONTROL MAY UTILIZE MANUAL OR AUTOMATIC MEANS OF ADJUSTMENT.
   b. A HUMIDITY CONTROL MAY BE A SEPARATE COMPONENT TO THE EXHAUST FAN AND IS NOT REQUIRED TO BE INTEGRAL (I.E., BUILT-IN).

NOTES:

1. FOR THE PURPOSES OF THIS SECTION, A BATHROOM IS A ROOM WHICH CONTAINS A BATHTUB, SHOWER, OR TUB/ SHOWER COMBINATION.
2. LIGHTING INTEGRAL TO BATHROOM EXHAUST FANS SHALL COMPLY WITH THE CALIFORNIA ENERGY CODE.

4.507 ENVIROMENTAL COMFORT

4.507.1 RESERVED

4.507.2 HEATING AND AIR-CONDITIONING SYSTEM DESIGN
HEATING AND AIR-CONDITIONING SYSTEMS SHALL BE SIZED, DESIGNED AND HAVE THEIR EQUIPMENT SELECTED USING THE FOLLOWING METHODS:

1. THE HEAT LOSS AND HEAT GAIN IS ESTABLISHED ACCORDING TO ANSI/ACCA 2 MANUAL J—2016 (RESIDENTIAL LOAD CALCULATION), ASHRAE HANDBOOKS OR OTHER EQUIVALENT DESIGN SOFTWARE OR METHODS.
2. DUCT SYSTEMS ARE SIZED ACCORDING TO ANSI/ACCA 1 MANUAL D—2016 (RESIDENTIAL DUCT SYSTEMS), ASHRAE HANDBOOKS OR OTHER EQUIVALENT DESIGN SOFTWARE OR METHODS.
3. SELECT HEATING AND COOLING EQUIPMENT ACCORDING TO ANSI/ACCA 3 MANUAL S—2016 (RESIDENTIAL EQUIPMENT SELECTION) OR OTHER EQUIVALENT DESIGN SOFTWARE OR METHODS.

EXCEPTION: USE OF ALTERNATE DESIGN TEMPERATURES NECESSARY TO ENSURE THE SYSTEMS FUNCTION ARE ACCEPTABLE.

CHAPTER 7 - INSTALLER & SPECIAL INSPECTOR QUALIFICATIONS

702 QUALIFICATIONS

702.1 INSTALLER TRAINING
HVAC SYSTEM INSTALLERS SHALL BE TRAINED AND CERTIFIED IN THE PROPER INSTALLATION OF HVAC SYSTEMS INCLUDING DUCTS AND EQUIPMENT BY A NATIONALLY OR REGIONALLY RECOGNIZED TRAINING OR CERTIFICATION PROGRAM. UNCERTIFIED PERSONS MAY PERFORM HVAC INSTALLATIONS WHEN UNDER THE DIRECT SUPERVISION AND RESPONSIBILITY OF A PERSON TRAINED AND CERTIFIED TO INSTALL HVAC SYSTEMS OR CONTRACTOR LICENSED TO INSTALL HVAC SYSTEMS. EXAMPLES OF ACCEPTABLE HVAC TRAINING AND CERTIFICATION PROGRAMS INCLUDE BUT ARE NOT LIMITED TO THE FOLLOWING:

1. STATE CERTIFIED APPRENTICESHIP PROGRAMS.
2. PUBLIC UTILITY TRAINING PROGRAMS.
3. TRAINING PROGRAMS SPONSORED BY TRADE, LABOR OR STATEWIDE ENERGY CONSULTING OR VERIFICATION ORGANIZATIONS.
4. PROGRAMS SPONSORED BY MANUFACTURING ORGANIZATIONS.
5. OTHER PROGRAMS ACCEPTABLE TO THE ENFORCING AGENCY.

702.2 SPECIAL INSPECTION [HCD]
WHEN REQUIRED BY THE ENFORCING AGENCY, THE OWNER OR THE RESPONSIBLE ENTITY ACTING AS THE OWNER'S AGENT SHALL EMPLOY ONE OR MORE SPECIAL INSPECTORS TO PROVIDE INSPECTION OR OTHER DUTIES NECESSARY TO SUBSTANTIATE COMPLIANCE WITH THIS CODE. SPECIAL INSPECTORS SHALL DEMONSTRATE COMPETENCE TO THE SATISFACTION OF THE ENFORCING AGENCY FOR THE PARTICULAR TYPE OF INSPECTION OR TASK TO BE PERFORMED. IN ADDITION TO OTHER CERTIFICATIONS OR QUALIFICATIONS ACCEPTABLE TO THE ENFORCING AGENCY, THE FOLLOWING CERTIFICATIONS OR EDUCATION MAY BE CONSIDERED BY THE ENFORCING AGENCY WHEN EVALUATING THE QUALIFICATIONS OF A SPECIAL INSPECTOR:

1. CERTIFICATION BY A NATIONAL OR REGIONAL GREEN BUILDING PROGRAM OR STANDARD PUBLISHER.
2. CERTIFICATION BY A STATEWIDE ENERGY CONSULTING OR VERIFICATION ORGANIZATION, SUCH AS HERS RATERS, BUILDING PERFORMANCE CONTRACTORS, AND HOME ENERGY AUDITORS.
3. SUCCESSFUL COMPLETION OF A THIRD PARTY APPRENTICE TRAINING PROGRAM IN THE APPROPRIATE TRADE.
4. OTHER PROGRAMS ACCEPTABLE TO THE ENFORCING AGENCY.

NOTES:

1. SPECIAL INSPECTORS SHALL BE INDEPENDENT ENTITIES WITH NO FINANCIAL INTEREST IN THE MATERIALS OR THE PROJECT THEY ARE INSPECTING FOR COMPLIANCE WITH THIS CODE.
2. HERS RATERS ARE SPECIAL INSPECTORS CERTIFIED BY THE CALIFORNIA ENERGY COMMISSION (CEC) TO RATE HOMES IN CALIFORNIA ACCORDING TO THE HOME ENERGY RATING SYSTEM (HERS).

[BSC] WHEN REQUIRED BY THE ENFORCING AGENCY, THE OWNER OR THE RESPONSIBLE ENTITY ACTING AS THE OWNER'S AGENT SHALL EMPLOY ONE OR MORE SPECIAL INSPECTORS TO PROVIDE INSPECTION OR OTHER DUTIES NECESSARY TO SUBSTANTIATE COMPLIANCE WITH THIS CODE. SPECIAL INSPECTORS SHALL DEMONSTRATE COMPETENCE TO THE SATISFACTION OF THE ENFORCING AGENCY FOR THE PARTICULAR TYPE OF INSPECTION OR TASK TO BE PERFORMED. IN ADDITION, THE SPECIAL INSPECTOR SHALL HAVE A CERTIFICATION FROM A RECOGNIZED STATE, NATIONAL OR INTERNATIONAL ASSOCIATION, AS DETERMINED BY THE LOCAL AGENCY. THE AREA OF CERTIFICATION SHALL BE CLOSELY RELATED TO THE PRIMARY JOB FUNCTION, AS DETERMINED BY THE LOCAL AGENCY.

NOTE:
SPECIAL INSPECTORS SHALL BE INDEPENDENT ENTITIES WITH NO FINANCIAL INTEREST IN THE MATERIALS OR THE PROJECT THEY ARE INSPECTING FOR COMPLIANCE WITH THIS CODE.

703 VERIFICATIONS

703.1 DOCUMENTATION.
DOCUMENTATION USED TO SHOW COMPLIANCE WITH THIS CODE SHALL INCLUDE BUT IS NOT LIMITED TO, CONSTRUCTION DOCUMENTS, PLANS, SPECIFICATIONS, BUILDER OR INSTALLER CERTIFICATION, INSPECTION REPORTS, OR OTHER METHODS ACCEPTABLE TO THE ENFORCING AGENCY WHICH DEMONSTRATE SUBSTANTIAL CONFORMANCE. WHEN SPECIFIC DOCUMENTATION OR SPECIAL INSPECTION IS NECESSARY TO VERIFY COMPLIANCE, THAT METHOD OF COMPLIANCE WILL BE SPECIFIED IN THE APPROPRIATE SECTION OR IDENTIFIED APPLICABLE CHECKLIST.

These plans are only to be used within City of Carpinteria jurisdiction. By using these standard plans ("ADU Plans") in accordance with the City of Carpinteria's Pre-Approved ADU Construction Plans Program, the User agrees to defend, indemnify, and hold harmless the City of Carpinteria and RRM from any and all claims, liabilities, suits, and demands on account of any injury, damage, or loss to persons or property, including injury or death, or economic losses, arising out of the use of these ADU Plans. The use of these ADU Plans does not eliminate or reduce the user's responsibility to verify any and all information herein.

CARPINTERIA ADU PROTOTYPES
SANTA BARBARA COUNTY, CA
CAL GREEN REQUIREMENTS

DATE
0218/23

SHEET
G-202

5/11/2023 4:50:45 PM
C:\Users\mjenkins\OneDrive - RRM Design Group\Documents\2727-01 Carpinteria ADU_Public Set_mjenkins.rvt

SITE PLAN (TO BE PROVIDED BY APPLICANT)

SCALE:

SITE PLAN GENERAL NOTES

1. REFER TO GENERAL NOTES SHEET G-101 FOR ADDITIONAL REQUIREMENTS
2. REFER TO STRUCTURAL PLANS FOR FURTHER INFORMATION.
3. CONTRACTOR TO REVIEW PLANS TO AVOID CONFLICTS WITH UTILITIES, I.E. METER LOCATIONS, ELECTRIC TRANSFORMER, BACKFLOW PREVENTERS, SEWER LINES AND ELECTRIC CONDUIT (POLE LIGHTING AT DRIVEWAY), ETC.
4. CONTRACTOR TO VERIFY ALL CONDITIONS AND UTILITY LOCATIONS AND IS RESPONSIBLE FOR LOCATING UTILITIES NOT SHOWN ON THE DRAWINGS.
5. CONTRACTOR TO AVOID DISTURBING OR DAMAGING EXISTING UTILITIES.
6. CALL BEFORE YOU DIG OR CAUSE ANY GROUND DISTURBANCES.
7. LIMIT CONSTRUCTION AREA TO THAT INDICATED ON THE PLANS. CONTRACTOR WILL BE RESPONSIBLE FOR DAMAGE TO AREAS OUTSIDE OF DESIGNATED CONSTRUCTION AREA.
8. COORDINATE ELECTRICAL REQUIREMENTS WITH PG&E.
9. FOR PROJECT INFORMATION DATA, SEE TITLE SHEET
10. ENCROACHMENT PERMIT IS REQ. FOR ANY WORK DONE WITHIN THE RIGHT OF WAYS.
11. PER CRC R311.3 FLOORS OR LANDINGS AT EXTERIOR DOORS SHALL BE AT LEAST AS WIDE AS DOOR SERVED AND SHALL PROVIDE A LENGTH IN THE DIRECTION OF TRAVEL EQUAL TO 36 INCHES MINIMUM. SLOPE OF EXTERIOR LANDINGS SHALL NOT EXCEED 1/4" PER FOOT (2% SLOPE).
12. METER SIZE AND SCE APPLICATION NUMBER TO BE PROVIDED ON PLANS.

SITE PLAN CHECKLIST

- ☐ **DRAWING SCALE**
  SITE PLAN SHOULD BE DRAWN TO A MEASURABLE SCALE.
- ☐ **PROPERTY LINES**
  SHOW OUTLINE OF PROPERTY USING DASHED LINE IN LEGEND
- ☐ **LABEL YARDS**
  LABEL FRONT, REAR, SIDE YARDS, AS WELL AS DRIVEWAYS, PATHWAYS AND ANY OTHER HARDSCAPE.
- ☐ **SETBACKS**
  DIMENSION THE DISTANCE BETWEEN BUILDINGS AND PROPOERTY LINES, AS WELL AS BUILIDNGS TO OTHER STRUCTURES. (SETBACKS TO PROPERTY LINE OR OTHER STRUCTURES SHALL BE 4' MINIMUM)
- ☐ **EASEMENTS** (IF APPLICABLE)
  REFER TO LEGEND. MAY INCLUDE UTILITY R.O.W.
- ☐ **LOCATION OF EXISTING UTILITIES**
  UTILITIES, POLES, SWERE DRAINS, ELECTRICAL, GAS METERS AND LINES AND ANY PHOTOVOLTATIC.
- ☐ **LABEL STREETS & SIDEWALKS**
- ☐ **LABEL ADU AND ADDRESS LOCATION**
  ADU WILL HAVE SAME ADDRESS AS THE PRIMARY RESIDENCE, AND THE LETTER SHALL BE VISIBLE FROM THE STREET.
- ☐ **FOOTPRINT OF EXISTING BUILDING**
  THIS INCLUDES ALL STRUCUTRES/PORCHES/GAZEBOS
- ☐ **FOOTPRINT OF PROPOSED ADU**
  REFER TO LEGEND FOR FOOTPRINT AT 10'=1" SCALE
- ☐ **DIMENSION BUILDING SEPARATION**
  DIMENSION THE DISTANCE BETWEEN THE PROPOSED ADU AND ANY EXISTING STRUCTURES
- ☐ **PROVIDE GRADE ELEVATIONS**
  ALL GRADE ELEVATIONS, EXISTING AND PROPOSED, AND INDICATE BY ARROWS THE LOCATIONS AND METHOD OF DISPOSAL OF ROOF AND SURFACE WATER.
- ☐ **PROVIDE GRADE ELEVATIONS**
  ALL GRADE ELEVATIONS, EXISTING AND PROPOSED, AND INDICATE BY ARROWS THE LOCATIONS AND METHOD OF DISPOSAL OF ROOF AND SURFACE WATER.

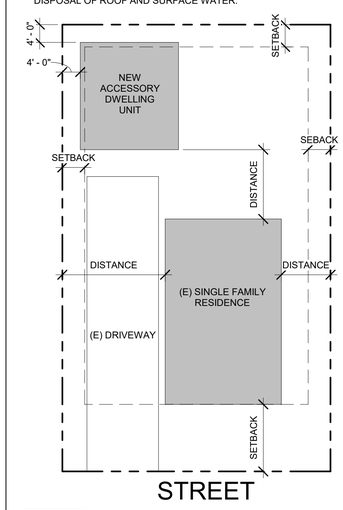

1 EXAMPLE SITE PLAN
A1-201AS-101 1/16" = 1'-0"

SITE PLAN LEGEND

- PROPERTY LINE
- SETBACK
- EASTMENT
- CONCRETE PAVING
- LANDSCAPE AREA, REFER TO LANDSCAPE DRAWINGS.

These plans are only to be used within City of Carpinteria jurisdiction. By using these standard plans ("ADU Plans") in accordance with the City of Carpinteria's Pre-Approved ADU Construction Plans Program, the User agrees to defend, indemnify, and hold harmless the City of Carpinteria and RRM from any and all claims, liabilities, suits, and demands on account of any injury, damage, or loss to persons or property, including injury or death, or economic losses, arising out of the use of these ADU Plans. The use of these ADU Plans does not eliminate or reduce the user's responsibility to verify any and all information herein.

CARPINTERIA ADU PROTOTYPES

SANTA BARBARA COUNTY, CA

ARCHITECTURAL SITE PLAN

DATE
0218/23

SHEET
AS-101

5/11/2023 4:50:44 PM
C:\Users\mjenkins\OneDrive - RRM Design Group\Documents\2727-01 Carpinteria ADU_Public Set_mjenkins.rvt

PLAN 2 - PERSPECTIVE - CALIFORNIA RANCH

PLAN 2 - PERSPECTIVE - COASTAL COTTAGE

These plans are only to be used within City of Carpinteria jurisdiction. By using these standard plans ("ADU Plans") in accordance with the City of Carpinteria's Pre-Approved ADU Construction Plans Program, the User agrees to defend, indemnify, and hold harmless the City of Carpinteria and RRM from any and all claims, liabilities, suits, and demands on account of any injury, damage, or loss to persons or property, including injury or death, or economic losses, arising out of the use of these ADU Plans. The use of these ADU Plans does not eliminate or reduce the user's responsibility to verify any and all information herein.

CARPINTERIA ADU PROTOTYPES

SANTA BARBARA COUNTY, CA

PERSPECTIVES

DATE
0218/23

SHEET
A2-100

5/11/2023 4:50:37 PM
C:\Users\mjenkins\OneDrive - RRM Design Group\Documents\2727-01 Carpinteria ADU_Public Set_mjenkins.rvt

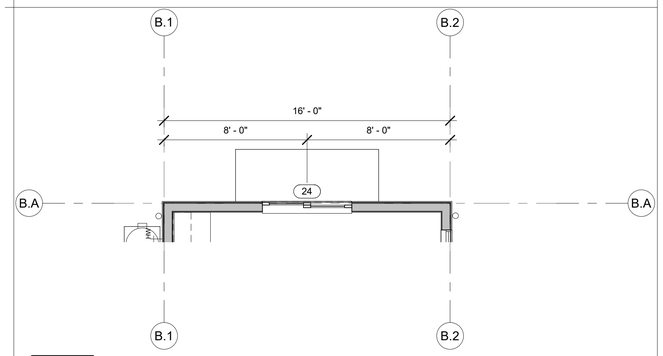

2 OPT DOOR
A1-201\A2-101 1/4" = 1'-0"

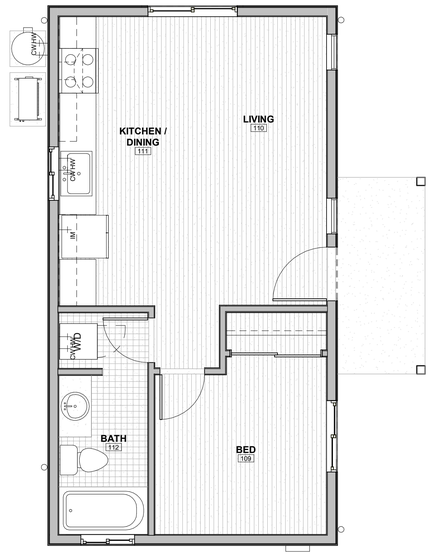

1 FINISH PLAN
A1-201\A2-101 1/4" = 1'-0"

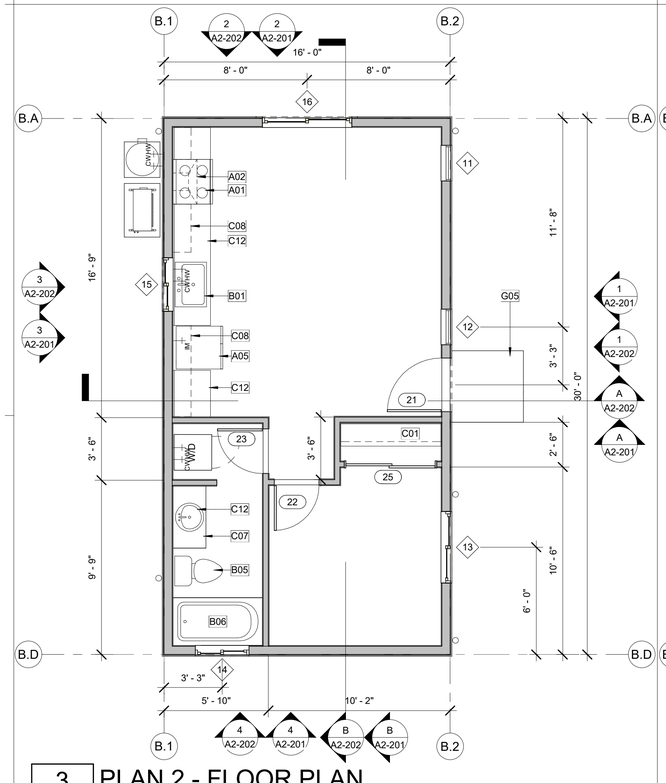

3 PLAN 2 - FLOOR PLAN
A1-201\A2-101 1/4" = 1'-0"

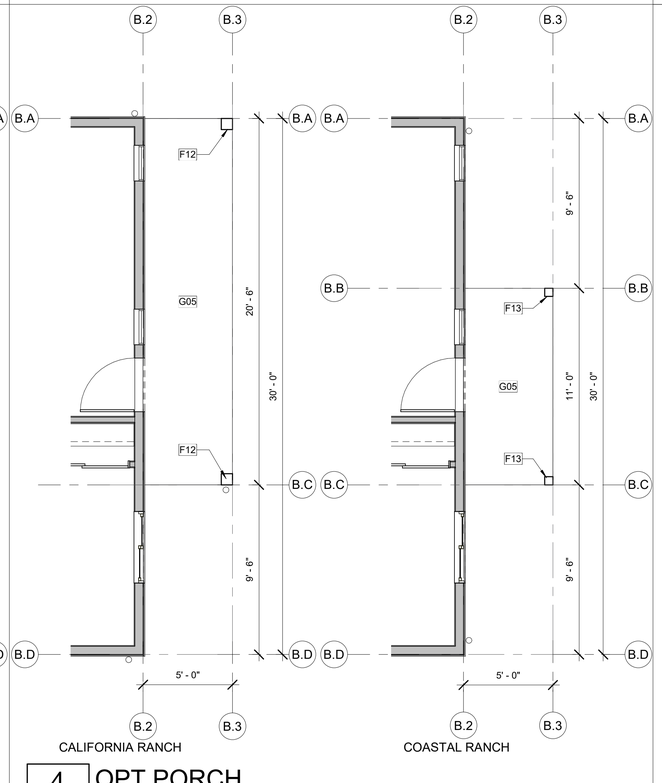

4 OPT PORCH
A1-201\A2-101 1/4" = 1'-0"

FINISH PLAN GENERAL NOTES

1. REFER TO GENERAL NOTES SHEET G-101 FOR ADDITIONAL REQUIREMENTS.
2. REFER TO ELECTRICAL PLANS FOR FURTHER INFORMATION.
3. REFER TO PLUMBING PLANS FOR FURTHER INFORMATION.
4. REFER TO DETAILS FOR FLOOR/CEILING ASSEMBLIES AND INTERIOR FINISH DETAILS.
5. ALL HARD SURFACE FLOORING SHALL BE SLIP RESISTANT AND MEET THE ***ANSI A326.3*** STANDARD FOR MEASURING THE DYNAMIC COEFFICIENT OF FRICTION (DCOF).
6. ALL FLOORING MATERIALS SHALL COMPLY WITH ***2022 CBC SEC. 804.1.***
7. ALL WALL AND CEILING FINISHES SHALL COMPLY WITH ***2022 CBC TABLE 803.13*** FOR MAXIMUM FLAME SPREAD AND SMOKE DENSITY.

FINISH SCHEDULE

FINISH SCHEDULE PLAN 2

NUMBER	NAME	FLOOR	CEILING	BASE	NOTES
109	BED	LVT	GWB	WD	
110	LIVING	LVT	GWB	WD	
111	KITCHEN / DINING	LVT	GWB	WD	
112	BATH	CT	GWB	WD	

FINISH LEGEND

LUXURY VINYL PLANK

CERAMIC TILE

CONCRETE

LEGEND

EXTERIOR - 5 1/2" WOOD STUD W/ PLYWOOD SHEATHING AND STUCCO, ONE LAYER GYPSUM WALL BOARD INTERIOR.

INTERIOR - 5 1/2" WOOD STUD W/ONE LAYER GYPSUM WALL BOARD EACH SIDE.

FLOOR PLAN GENERAL NOTES

1. REFER TO GENERAL NOTES SHEET G-101 AND G-102 FOR ADDITIONAL REQUIREMENTS.
2. REFER TO STRUCTURAL PLANS FOR FURTHER INFORMATION.
3. REFER TO ELECTRICAL PLANS FOR FURTHER INFORMATION IF PROVIDED.
4. REFER TO MECHANICAL PLANS, DRAWINGS OR REPORTS FOR FURTHER INFORMATION.
5. REFER TO PLUMBING PLANS OR DRAWINGS FOR FURTHER INFORMATION IF PROVIDED.
6. ALL FURNITURE AND EQUIPMENT IS BY OWNER AND IS SHOWN FOR COORDINATION PURPOSES ONLY.
7. DIMENSIONS ARE TO FACE OF FRAMING UNLESS SPECIFICALLY NOTED OTHERWISE.
8. PROVIDE ADEQUATE BLOCKING IN WALLS FOR CABINETS AND OTHER WALL MOUNTED ACCESSORIES INCLUDING BUT NOT LIMITED TO HANDRAILS, SHELVING AND BATHROOM FIXTURES.
9. PROVIDE FIREBLOCKING FOR WALL CAVITIES THAT EXCEED 2022 CBC HEIGHT LIMITATIONS
10. DOOR AND WINDOW DIMENSIONS ARE CENTERED AT OPENINGS
11. WHERE DOOR IS LOCATED WITHOUT DIMENSION AT THE CORNER OF A ROOM IT SHALL BE 4" FROM FACE OF FRAMING OF ADJACENT WALL TO ROUGH DOOR OPENING
12. PROVIDE A LANDING EQUAL TO THE WIDTH OF THE DOOR OR STAIR AND A LENGTH IN THE DIRECTION OF TRAVEL EQUAL TO 36 IN. ***CRC R311.3***
13. WHERE RECESSED FIXTURES OCCUR IN WALLS OR HORIZONTAL ASSEMBLIES, THE FIRE RATING OF THOSE ASSEMBLIES SHALL BE MAINTAINED
14. AT ALL PENETRATIONS AND INTERSECTIONS OF FIRE-RATED PARTITIONS, PROVIDE FIRE SEALANT AND/OR FIRE STOPPING TO MAINTAIN CONTINUITY OF PARTITION RATING
15. GLAZING IN ANY PORTION OF A BUILDING OF A BUILDING WALL ENCLOSING SHOWERS OR TUBS WHERE THE BOTTOM EXPOSED EDGE OF THE GLAZING IS LESS THAN 60 INCHES ABOVE A STANDING SURFACE OR DRAIN INLET SHALL BE TEMPERED GLASS. ***CRC R308.4 No. 5***

KEYNOTES

A01	30" WIDE FREE STANDING ELECTRIC RANGE OVEN. VENT TO EXTERIOR.
A02	30" EXHAUST HOOD.
A05	REFRIGERATOR LOCATION. PROVIDE 32" SPACE WITH ROUGH PLUMBING FOR ICE MAKER (RECESS IN WALL).
B01	SINGLE COMPARTMENT UNDER-MOUNT KITCHEN SINK W/ GARBAGE DISPOSAL. REFER TO WATER EFFICIENCY REQUIREMENTS ON CALGREEN CODE NOTES SHEET.
B05	WATER CLOSET. REFER TO WATER EFFICIENCY REQUIREMENTS ON CALGREEN CODE NOTES SHEETS.
B06	32" x 60" x 72" TUB AND SHOWER COMBINATION. MODEL BY BUILDER. WATER RESISTENT FINISH TO EXTEND TO 72" ABOVE FLOOR. SHOWER DOOR IF APPLICABLE TO BE TEMPERED GLASS.
C01	SINGLE WOOD SHELF AND POLE.
C07	24" DEEP FULL 36" TALL BASE CABINET AND COUNTERTOP.
C08	12" DEEP UPPER CABINET
C12	34 1/2" HIGH BASE CABINET AND COUNTERTOP.
F12	8X8 WOOD POST
F13	6X6 WOOD POST
G05	CONCRETE STOOP. SLOPE 1/4"/FT AWAY FROM THE BUILDING. MUST BE AT LEAST AS WIDE AS DOOR AND 3' DEEP.

DOOR SCHEDULE

NO.	TYPE	DOOR WIDTH	DOOR HEIGHT	REMARKS
21	A	3' - 0"	6' - 8"	
22	A	2' - 6"	6' - 8"	
23	A	2' - 6"	6' - 8"	
25	B	5' - 0"	6' - 8"	

DOOR LEGEND

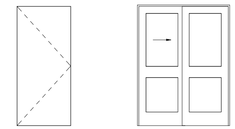

A. SOLID CORE WOOD.

B. DOUBLE SLIDING INTERIOR

DOOR GENERAL NOTES

1. REFER TO GENERAL NOTES SHEET G-102 FOR ADDITIONAL REQUIREMENTS.
2. REFER TO PLANS FOR LOCATION OF DOORS.
3. VERIFY ROUGH OPENING SIZE WITH DOOR MANUFACTURER SPECIFICATIONS PRIOR TO CONSTRUCTION.
4. CONTRACTOR TO VERIFY ACTUAL DOOR SIZE TO FIT FINISH OPENING PRIOR TO FABRICATION OF DOOR AND FINISH OPENING.
5. FIRE RATED DOORS SHALL BE SOLID WOOD OR SOLID HONEYCOMB CORE STEEL DOOR 1-3/8" THICK OR COMPLIANT WITH ***2022 CRC SECTION R302.5.1***. DOORS SHALL BE SELF-CLOSING AND SELF-LATCHING WITH WEATHER STRIPPING TO BE TIGHT FITTING.
6. GLAZING IN DOORS SHALL BE TEMPERED PER ***SECTION R308.4.1***.
7. PROVIDE A LANDING EQUAL TO THE WIDTH OF THE DOOR OR STAIR AND A LENGTH IN THE DIRECTION OF TRAVEL EQUAL TO 36 IN. ***CRC R311.3***

DOOR REMARKS

1. GLAZING PER DOOR TYPES. TEMPERED.
2. PROVIDE 100 SQ INCHES OF VENTING IN DOOR OR BY OTHER APPROVED MEANS.
3. OPTIONAL DOOR.
4. OPTIONAL GLAZING IN DOOR. TEMPERED (BOTH PANES).

WINDOW GENERAL NOTES

1. REFER TO FLOOR PLANS FOR WINDOW LOCATIONS.
2. CONTRACTOR TO VERIFY EXACT ROUGH OPENING SIZES PRIOR TO FABRICATION OF ROUGH OPENINGS.
3. REFER TO ENERGY COMPLIANCE REPORTS FOR U-FACTOR, SHGC AND ADDITIONAL WINDOW REQUIREMENTS.
4. ALL GLAZING IS DOUBLE PANE UNLESS OTHERWISE NOTED.
5. EGRESS WINDOWS SHALL HAVE A CLEAR OPENING WITH A MAX. SILL HEIGHT OF 44" AFF, MIN. NET CLEAR OPENING FOR EMERGENCY ESCAPE SHALL BE 5.7 S.F. EXCEPT: 5 S.F. MIN. AT GROUND FLOOR. MINIMUM NET CLEAR OPENING DIMENSIONS: HEIGHT: 24", WIDTH: 20". ***2022 CRC SEC. R310.2***
6. EACH SLEEPING ROOM SHALL HAVE A DOOR DIRECTLY TO THE EXTERIOR OR A WINDOW THAT WILL PROVIDE A CLEAR SPACE OPENING OF AT LEAST 5.7 SQUARE FEET IN THE OPEN POSITION, AND A MINIMUM CLEAR OPENING WIDTH OF 20 INCHES AND CLEAR OPENING HEIGHT OF 24 INCHES AND A MAXIMUM SILL HEIGHT OF 44" ABOVE THE FINISHED FLOOR. SLEEPING ROOMS AT GRADE FLOOR LEVEL MAY HAVE A CLEAR SPACE OPENING OF 5 SQUARE FEET. ***CRC R310.1, 310.1.1, 310.1.2***.

WINDOW REMARKS

1. REQUIRED EGRESS WINDOW. REFER TO WINDOW GENERAL NOTE #5 FOR ADDITIONAL INFORMATION.
2. WINDOW INCLUDES BOTH PANES TEMPERED GLAZING.

WINDOW SCHEDULE

NO.	TYPE	SIZE WIDTH	SIZE HEIGHT	HEAD HEIGHT	REMARKS
11	A	2' - 0"	4' - 0"	6' - 8"	
12	A	2' - 0"	4' - 0"	6' - 8"	2
13	B	4' - 0"	4' - 0"	6' - 8"	1
14	B	3' - 0"	1' - 6"	6' - 8"	2
15	B	3' - 0"	3' - 0"	6' - 8"	2
16	B	5' - 0"	4' - 0"	6' - 8"	

PLAN 2 - LIGHT & VENTILATION CALCULATION

Name	Area	LIGHT %	LIGHT REQUIRED	LIGHT PROVIDED	VENT %	VENT REQUIRED	VENT PROVIDED
KIT/DIN/LIV	254 SF	8	21	32	4	11	18
BEDROOM	91 SF	8	8	15	4	4	8

WINDOW LEGEND

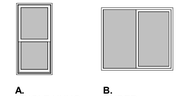

A. SINGLE HUNG.

B. SLIDER.

These plans are only to be used within City of Carpinteria jurisdiction. By using these standard plans ("ADU Plans") in accordance with the City of Carpinteria's Pre-Approved ADU Construction Plans Program, the User agrees to defend, indemnify, and hold harmless the City of Carpinteria and RRM from any and all claims, liabilities, suits, and demands on account of any injury, damage, or loss to persons or property, including injury or death, or economic losses, arising out of the use of these ADU Plans. The use of these ADU Plans does not eliminate or reduce the user's responsibility to verify any and all information herein.

CARPINTERIA ADU PROTOTYPES

SANTA BARBARA COUNTY, CA

FLOOR PLANS & FINISH PLANS

DATE
0218/23

SHEET
A2-101

5/11/2023 4:50:38 PM
C:\Users\mjenkins\OneDrive - RRM Design Group\Documents\2727-01 Carpinteria ADU_Public Set_mjenkins.rvt

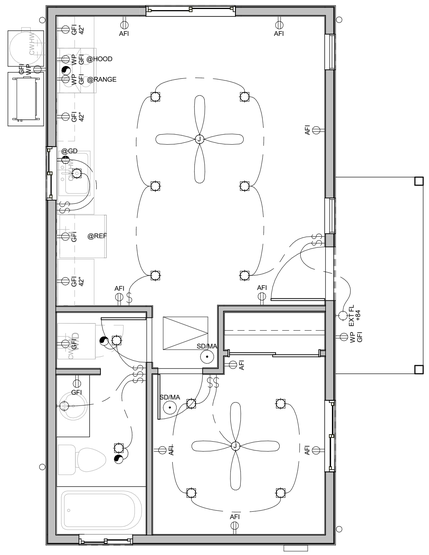

1 PLAN 2 - ELECTRICAL

A1-201|A2-111 1/4" = 1'-0"

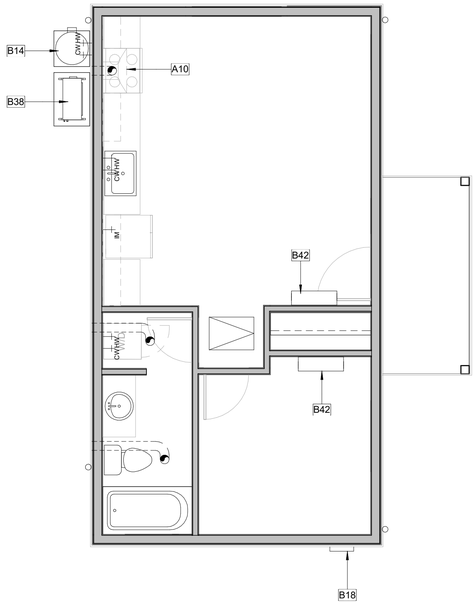

2 PLAN 2 - MECHANICAL

A1-201|A2-111 1/4" = 1'-0"

GENERAL NOTES

1. REFER TO GENERAL NOTES SHEET G-101 FOR ADDITIONAL REQUIREMENTS.
2. SEE DETAILS FOR ADDITIONAL INFORMATION AND REQUIREMENTS.
3. SEE TITLE 24 REPORTS FOR ADDITIONAL INFORMATION.

KEYNOTES

A10	(50) CFM MIN. INTERMITTENT VENTILATION HOOD. VENT TO EXTERIOR THROUGH ROOF OR EXTERIOR WALL. TERMINATION SHALL BE 3' MINIMUM FROM OPERABLE OPENING IN EXTERIOR WALL.
B14	50 GALLON TANK TYPE ELECTRIC WATER HEATER. REFER TO TITLE 24 FOR ADDITIONAL INFORMATION. PROVIDE CONCRETE PAD MIN. 6" LARGER THAN UNIT IN EACH DIRECTION. 3" MIN. ABOVE GRADE. STRAPPING DETAIL 51/AD-902. PROVIDE WHETHER PROOF ENCLOSURE AT EXTERIOR LOCATIONS
B18	ELECTRIC PANEL TBD.
B38	MULTI-ZONE HEAT PUMP CONDENSING UNIT. REFER TO PLANS FOR LOCATION OF INDOOR FAN FAN COIL UNITS. REFER TO TITLE 24 FOR ADDITIONAL INFORMATION. PROVIDE CONCRETE PAD MIN. 6" LARGER THAN UNIT IN EACH DIRECTION, 3" MIN. ABOVE GRADE.
B42	DUCTLESS HEAT PUMP. INDOOR UNIT. REFER TO T24 REPORT FOR ADDITIONAL INFORMATION.

LEGEND

- ELECTRICAL SWITCH
- 3 ELECTRICAL SWITCH-THREE WAY
- 4 ELECTRICAL SWITCH-FOUR WAY
- OS ELECTRICAL SWITCH-VACANCY SENSOR
- D ELECTRICAL SWITCH-DIMMER
- F ELECTRICAL SWITCH-FAN
- A ASTRONOMICAL TIME SWITCH
- EXHAUST FAN
- FL VP EXHAUST FAN/LIGHT COMBINATION
- P PENDANT LIGHT
- FL SURFACE MOUNTED HIGH-EFFICACY LIGHT
- WALL MOUNTED LIGHT
- +84 FL WALL MOUNTED HIGH-EFFICACY LIGHT
- RECESSED DOWNLIGHT
- FL RECESSED HIGH- EFFICACY DOWNLIGHT
- VP RECESSED DOWNLIGHT-VAPOR PROOF
- ELECTRICAL WIRING
- SD SMOKE DETECTOR/ALARM
- SD/MA COMBINATION SMOKE/CARBON MONOXIDE (HARDWIRED)
- CHIME DOOR BELL CHIME
- PB DOOR BELL BUTTON/GARAGE DOOR OPENER BUTTON
- T TELEPHONE LOCATION
- TV CABLE TELEVISION LOCATION
- J ELECTRICAL JUNCTION BOX
- CEILING FAN OPTIONAL (PRE WIRE FOR CEILING FAN ONLY)
- DUPLEX OUTLET ARC-FAULT CIRCUIT INTERRUPTER
- 220V DUPLEX OUTLET 220 VOLTS
- AFI DUPLEX OUTLET ARC FAULT INTERRUPTER
- GFI DUPLEX OUTLET GROUND FAULT INTERRUPTER
- GFI WP DUPLEX OUTLET WATERPROOF GROUND FAULT INTERRUPTER
- DUPLEX OUTLET AFCI-HALF HOT
- DUPLEX OUTLET MICROWAVE
- DW DUPLEX OUTLET DISH WASHER
- CW COLD WATER STUB OUT
- HW HOT WATER STUB OUT
- HB WATER HOSE BIBB
- SOV HB WATER HOSE BIBB WITH SHUT OF VALVE
- IM ICE MACHINE STUB OUT
- G GAS STUB OUT
- SURFACE MOUNTED HIGH-EFFICACY LIGHT
- UNDER CABINET HIGH-EFFICACY LIGHT
- 22"X30" MIN. CEILING ACCESS PANEL
- G FORCED AIR UNIT, PROVIDE LIGHT, SWITCH, DEDICATED 110 OUTLET IN ATTIC

These plans are only to be used within City of Carpinteria jurisdiction. By using these standard plans ("ADU Plans") in accordance with the City of Carpinteria's Pre-Approved ADU Construction Plans Program, the User agrees to defend, indemnify, and hold harmless the City of Carpinteria and RRM from any and all claims, liabilities, suits, and demands on account of any injury, damage, or loss to persons or property, including injury or death, or economic losses, arising out of the use of these ADU Plans. The use of these ADU Plans does not eliminate or reduce the user's responsibility to verify any and all information herein.

CARPINTERIA ADU PROTOTYPES

SANTA BARBARA COUNTY, CA

MECHANICAL & ELECTRICAL PLANS

DATE
0218/23

SHEET
A2-111

5/11/2023 4:50:39 PM
C:\Users\mjenkins\OneDrive - RRM Design Group\Documents\2727-01 Carpinteria ADU_Public Set_mjenkins.rvt

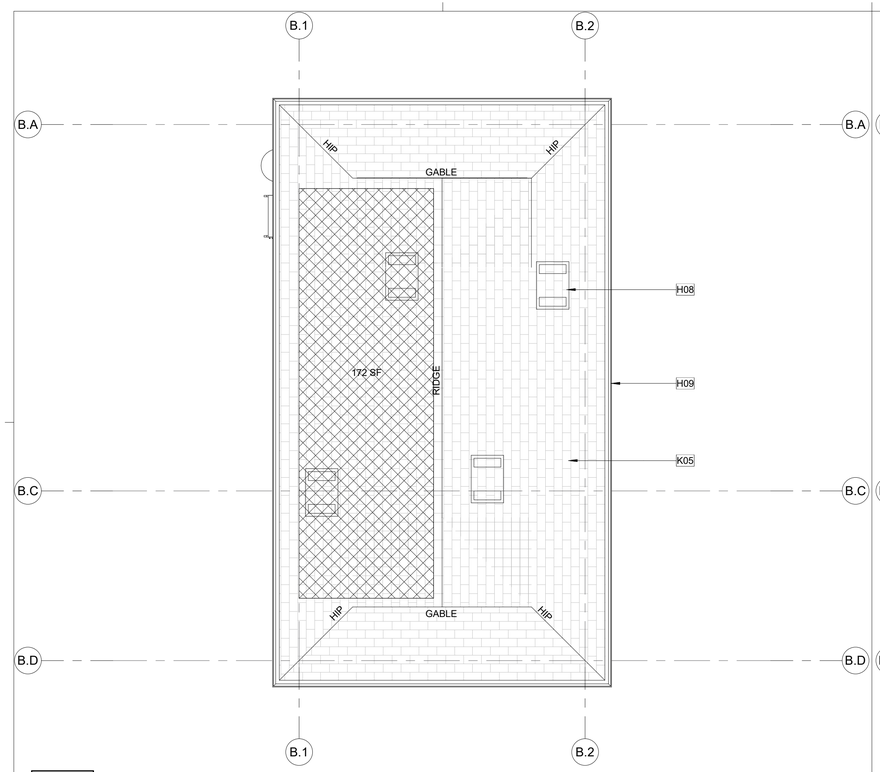

2 PLAN 2 - ROOF PLAN - CALIFORNIA RANCH
A1-201|A2-121 1/4" = 1'-0"

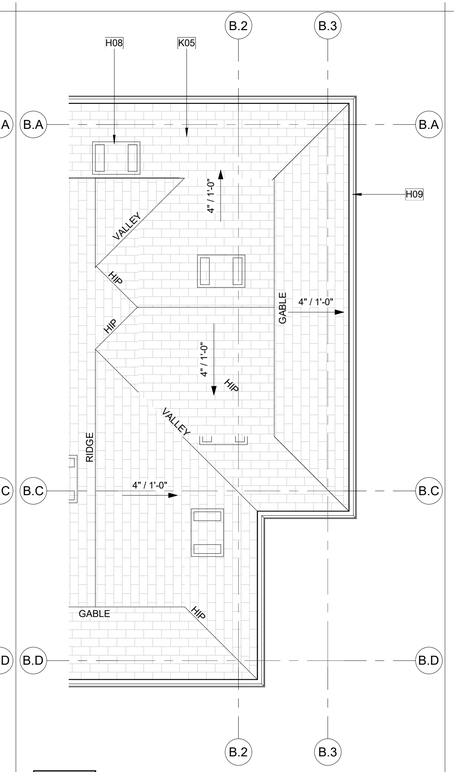

1 PLAN 2 - PORCH OPTION
A1-201|A2-121 1/4" = 1'-0"

ROOF PLAN GENERAL NOTES

1. REFER TO GENERAL NOTES SHEET G-102 FOR ADDITIONAL REQUIREMENTS
2. REFER TO STRUCTURAL PLANS FOR ROOF FRAMING INFORMATION INCLUDING MEMBER SIZES AND CONNECTION HARDWARE.
3. PROVIDE A MINIMUM OF 1 INCH OF AIRSPACE BETWEEN THE INSULATION AND ROOF SHEATHING.
4. WHERE THE ROOF PROFILE ALLOWS A SPACE BETWEEN THE ROOF COVERING AND DECKING, THE SPACES SHALL BE CONSTRUCTED TO PREVENT THE INTRUSION OF FLAMES AND EMBERS, BE FIRESTOPPED WITH APPROVED MATERIALS OR HAVE ONE LAYER OF MINIMUM 72 POUND MINERAL-SURFACED NONPERFORATED CAP SHEET OVER THE COMBUSTIBLE DECKING.
5. ALL ROOFING MATERIALS TO BE INSTALLED PER MANUFACTURER'S SPECS.
6. OVERHANG DIMENSIONS ARE FROM FACE OF EXTERIOR WALL FRAMING TO ROOF EDGE.
7. ROOF VENTS SHALL BE INSTALLED PER MANUFACTURER'S SPECIFICATIONS. ADJUST AS NEEDED TO ACCOMMODATE TRUSS LOCATIONS, PLUMBING VENTS, AND SOLAR COLLECTORS.

WUI ROOF NOTES

1. ALL ROOFING SHALL BE CLASS A RATED
2. BLOCK ANY SPACES BETWEEN ROOF DECKING AND COVERING.
3. REMOVE ACCUMULATED DEBRI ON ROOF TOP
4. COVER ALL VENT OPENINGS WITH 1/16" TO 1/8" METAL MESH SCREEN.
5. REFER TO PLUMBING PLANS FOR ROOF VENT PENETRATION.
6. VENTS SHALL BE METAL. DO NOT USE PLASTIC OR FIBERGLASS.
7. USE EMBER A FLAME RESISTANT (WUI) VENTS
8. MAINTAIN RAIN GUTTERS TO PREVENT ACCUMULATION OF DEBRI.

KEYNOTES

B41	FAN COIL. REFER TO PLANS FOR LOCATION OF OUTDOOR CONDENSING UNIT. REFER TO TITLE 24 FOR ADDITIONAL INFORMATION. PROVIDE OUTLET.
C08	12" DEEP UPPER CABINET
F03	30" X 30" MIN. ATTIC ACCESS. PROVIDED SWITCH AND OUTLET AT ATTIC FOR FAU. PERMANENTLY ATTACH R-38 OR GREATER INSULATION TO ATTIC ACCESS DOOR USING ADHESIVE OR MECHANICAL FASTENERS CEnC 150.0 (a)1. PROVIDE GASKETED ATTIC ACCESS TO PREVENT AIR LEAKAGE CEnC 150.0 (a)1.

ROOF VENTING CALCULATIONS

UPPER VENTS: *O'HAGIN TAPERED LOW PROFILE STANDARD LINE*
72.0 SQ.IN OF AIR MOVEMENT PER VENT = 72. SQ.IN. / 144 = 0.5 SF

LOWER VENTS: *O'HAGIN TAPERED LOW PROFILE STANDARD LINE*
72.0 SQ.IN OF AIR MOVEMENT PER VENT = 72. SQ.IN. / 144 = 0.5 SF

"UPPER VENTS PROVIDED" = (TOTAL ATTIC AREA/300) * (0.5) / (0.5 SF)

"LOWER VENTS PROVIDED" = (TOTAL ATTIC AREA/300) * (0.5) / (0.5 SF)

ATTIC	AREA	REQUIRED ATTIC VENTING (NFA)	UPPER VENTING REQUIRED (NFA)	LOWER VENTING REQUIRED (NFA)
ATTIC - PLAN 2	550 SF	1.83 SF	0.92 SF	0.92 SF

VENT TYPE	COUNT	VENT LENGTH	NET FREE AREA PER VENT	PROVIDED NET FREE AREA
LOWER				
O'HAGIN SHINGLE ROOF VENT (LOWER)	3	2' - 8"	0.50 SF	1.50 SF
				1.50 SF
UPPER				
O'HAGIN SHINGLE ROOF VENT (UPPER)	3	2' - 8"	0.50 SF	1.50 SF
				1.50 SF

LEGEND

- 10'-0" — HEIGHT OF TOP OF ROOFING SURFACE
- 2" / 12" — ROOF SLOPE (REFER TO PLANS FOR ACTUAL SLOPE)
- O'HAGIN ATTIC VENT, PAINT TO MATCH ROOF COLOR. (REFER TO EXTERIOR ELEVATIONS FOR COLORS AND MATERIALS.)
- WALL BELOW
- GUTTER, CONNECT TO DOWNSPOUT
- DOWNSPOUT, TO ROOF OR SPLASHBLOCK BELOW U.N.O.
- FUTURE SOLAR ZONE. REFER TO SOLAR READY NOTES ON SHEET G-101.

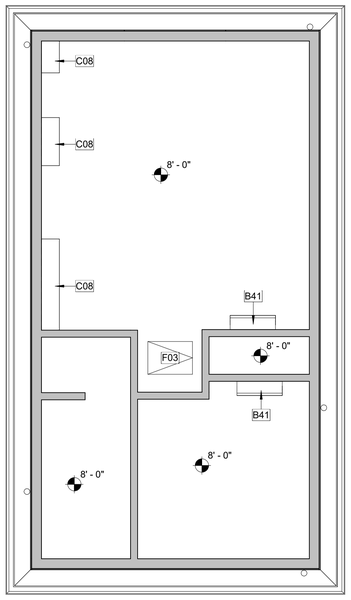

3 PLAN 2 - REFLECTED CEILING PLAN - CALIFORNIA RANCH
A1-201|A2-121 1/4" = 1'-0"

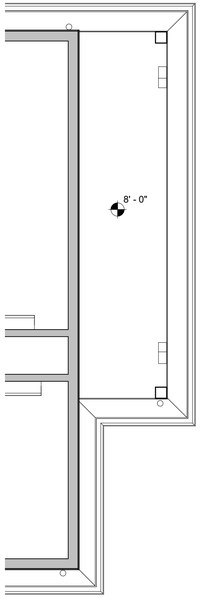

4 PLAN 2 - PORCH OPTION
A1-201|A2-121 1/4" = 1'-0"

RCP GENERAL NOTES

1. REFER TO GENERAL NOTES SHEET G-101 AND G-102 FOR ADDITIONAL REQUIREMENTS.
2. REFER TO ELECTRICAL PLANS FOR FURTHER INFORMATION.
3. REFER TO MECHANICAL PLANS FOR FURTHER INFORMATION.
4. REFER TO DETAILS FOR FLOOR/CEILING ASSEMBLIES.
5. HEIGHT OF CEILINGS SHALL BE MEASURED FROM TOP OF SLAB TO FINISH FACE OF GWB OR FACE OF CEILING GRID AS INDICATED ON THE REFLECTED CEILING PLAN, UNO. 7' 0" MINIMUM CEILING IN HABITABLE SPACES AND HALLWAYS. ***CRC R305.1***
6. CONTRACTOR TO VERIFY DEPTH OF SOFFITS AND HOLD TIGHT TO PLUMBING, SPRINKLERS, ELECTRICAL AND MECHANICAL DUCTS
7. SEE MECHANICAL DRAWINGS FOR MECH. ACCESS PANELS. PAINT TO MATCH CEILING
8. AT DROPPED GWB SOFFITS/GWB BEAMS, PROVIDE C-STUDS AS VERTICAL SUPPORTS AT EACH SIDE OF THE SOFFIT/BEAM AND DIAGONAL BRACING FOR WRACKING. IF CEILING JOIST SPACING DIFFERS FROM FLOOR THEN BLOCKING BETWEEN THE FLOOR FRAMING MAY BE UTILIZED TO ATTACH THE
9. ALL LIGHT FIXTURES ARE TO BE INSTALLED ACCORDING TO THE ARCHITECTURAL REFLECTED CEILING PLAN. ARCHITECT TO REVIEW CEILING LAYOUT INCLUDING BULKHEADS AND GRID PRIOR TO INSTALLATION.
10. SEE ELECTRICAL PLANS FOR LIGHTING LOCATIONS AND SPECIFICATIONS, AND EXIT SIGN LOCATIONS.

LEGEND

- XX'-X" — CEILING HEIGHT (SEE PLAN FOR ACTUAL HEIGHTS)
- INTERIOR - GYPSUM BOARD CEILING
- INTERIOR - GYPSUM BOARD SOFFIT
- INTERIOR - ACOUSTICAL TILE CEILING
- EXTERIOR - CEMENT PLASTER SOFFIT
- MECHANICAL EQUIPMENT, REFER TO MECHANICAL PLANS
- LIGHT FIXTURE, REFER TO ELECTRICAL PLANS

These plans are only to be used within City of Carpinteria jurisdiction. By using these standard plans ("ADU Plans") in accordance with the City of Carpinteria's Pre-Approved ADU Construction Plans Program, the User agrees to defend, indemnify, and hold harmless the City of Carpinteria and RRM from any and all claims, liabilities, suits, and demands on account of any injury, damage, or loss to persons or property, including injury or death, or economic losses, arising out of the use of these ADU Plans. The use of these ADU Plans does not eliminate or reduce the user's responsibility to verify any and all information herein.

CARPINTERIA ADU PROTOTYPES

SANTA BARBARA COUNTY, CA
ROOF PLANS & REFLECTED CEILING PLANS - CALIFORNIA RANCH

DATE
0218/23

SHEET
A2-121

5/11/2023 4:50:40 PM
C:\Users\mjenkins\OneDrive - RRM Design Group\Documents\2727-01 Carpinteria ADU_Public Set_mjenkins.rvt

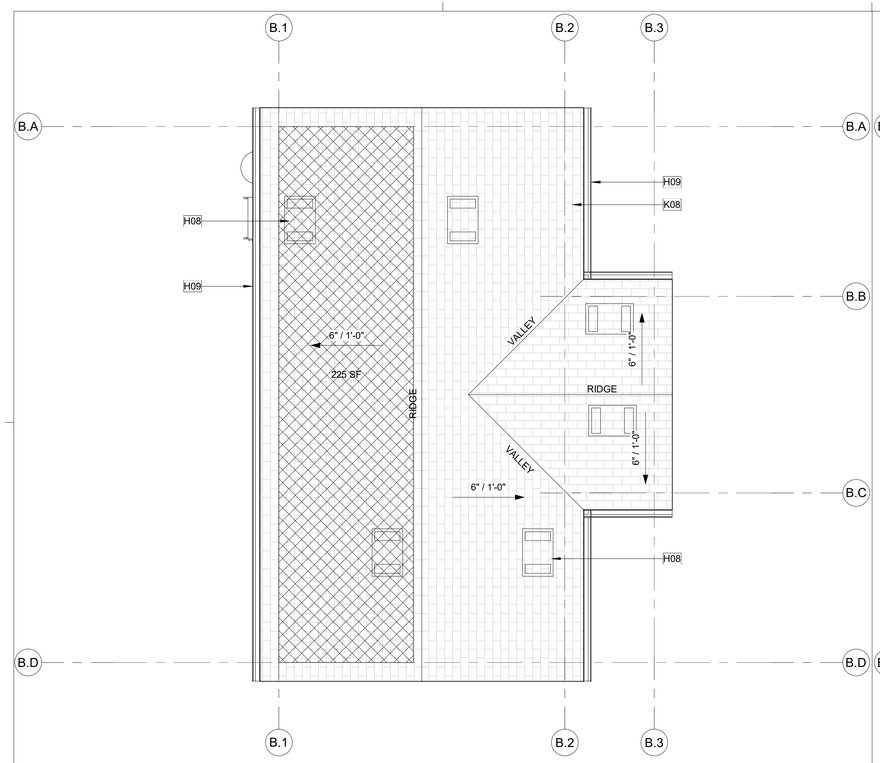

1 PLAN 2 - ROOF PLAN - COASTAL COTTAGE
A1-201|A2-122 1/4" = 1'-0"

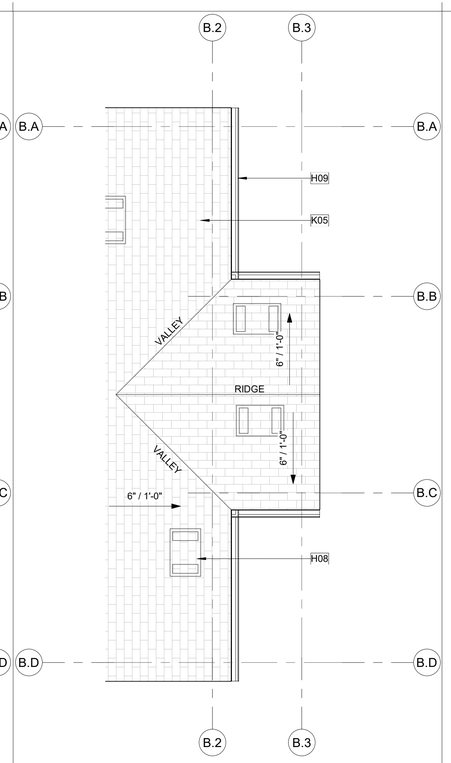

2 PLAN 2 - PORCH PLAN
A1-201|A2-122 1/4" = 1'-0"

ROOF PLAN GENERAL NOTES

1. REFER TO GENERAL NOTES SHEET G-102 FOR ADDITIONAL REQUIREMENTS
2. REFER TO STRUCTURAL PLANS FOR ROOF FRAMING INFORMATION INCLUDING MEMBER SIZES AND CONNECTION HARDWARE.
3. PROVIDE A MINIMUM OF 1 INCH OF AIRSPACE BETWEEN THE INSULATION AND ROOF SHEATHING.
4. WHERE THE ROOF PROFILE ALLOWS A SPACE BETWEEN THE ROOF COVERING AND DECKING, THE SPACES SHALL BE CONSTRUCTED TO PREVENT THE INTRUSION OF FLAMES AND EMBERS, BE FIRESTOPPED WITH APPROVED MATERIALS OR HAVE ONE LAYER OF MINIMUM 72 POUND MINERAL-SURFACED NONPERFORATED CAP SHEET OVER THE COMBUSTIBLE DECKING.
5. ALL ROOFING MATERIALS TO BE INSTALLED PER MANUFACTURER'S SPECS.
6. OVERHANG DIMENSIONS ARE FROM FACE OF EXTERIOR WALL FRAMING TO ROOF EDGE.
7. ROOF VENTS SHALL BE INSTALLED PER MANUFACTURER'S SPECIFICATIONS. ADJUST AS NEEDED TO ACCOMMODATE TRUSS LOCATIONS, PLUMBING VENTS, AND SOLAR COLLECTORS.

WUI ROOF NOTES

1. ALL ROOFING SHALL BE CLASS A RATED
2. BLOCK ANY SPACES BETWEEN ROOF DECKING AND COVERING.
3. REMOVE ACCUMULATED DEBRI ON ROOF TOP
4. COVER ALL VENT OPENINGS WITH 1/16" TO 1/8" METAL MESH SCREEN.
5. REFER TO PLUMBING PLANS FOR ROOF VENT PENETRATION.
6. VENTS SHALL BE METAL. DO NOT USE PLASTIC OR FIBERGLASS.
7. USE EMBER A FLAME RESISTANT (WUI) VENTS
8. MAINTAIN RAIN GUTTERS TO PREVENT ACCUMULATION OF DEBRI.

KEYNOTES

B41	FAN COIL. REFER TO PLANS FOR LOCATION OF OUTDOOR CONDENSING UNIT. REFER TO TITLE 24 FOR ADDITIONAL INFORMATION. PROVIDE OUTLET.
C08	12" DEEP UPPER CABINET
F03	30" X 30" MIN. ATTIC ACCESS. PROVIDED SWITCH AND OUTLET AT ATTIC FOR FAU. PERMANENTLY ATTACH R-38 OR GREATER INSULATION TO ATTIC ACCESS DOOR USING ADHESIVE OR MECHANICAL FASTENERS CEnC 150.0 (a)1. PROVIDE GASKETED ATTIC ACCESS TO PREVENT AIR LEAKAGE CEnC 150.0 (a)1.

ROOF VENTING CALCULATIONS

UPPER VENTS: *O'HAGIN TAPERED LOW PROFILE STANDARD LINE*
72.0 SQ.IN OF AIR MOVEMENT PER VENT = 72. SQ.IN. / 144 = 0.5 SF

LOWER VENTS: *O'HAGIN TAPERED LOW PROFILE STANDARD LINE*
72.0 SQ.IN OF AIR MOVEMENT PER VENT = 72. SQ.IN. / 144 = 0.5 SF

"UPPER VENTS PROVIDED" = (TOTAL ATTIC AREA/300) * (0.5) / (0.5 SF)

"LOWER VENTS PROVIDED" = (TOTAL ATTIC AREA/300) * (0.5) / (0.5 SF)

ATTIC	AREA	REQUIRED ATTIC VENTING (NFA)	UPPER VENTING REQUIRED (NFA)	LOWER VENTING REQUIRED (NFA)
ATTIC - PLAN 2	550 SF	1.83 SF	0.92 SF	0.92 SF

VENT TYPE	COUNT	VENT LENGTH	NET FREE AREA PER VENT	PROVIDED NET FREE AREA
LOWER				
O'HAGIN SHINGLE ROOF VENT (LOWER)	3	2' - 8"	0.50 SF	1.50 SF
				1.50 SF
UPPER				
O'HAGIN SHINGLE ROOF VENT (UPPER)	3	2' - 8"	0.50 SF	1.50 SF
				1.50 SF

LEGEND

- 10'-0" — HEIGHT OF TOP OF ROOFING SURFACE
- 2" / 12" — ROOF SLOPE (REFER TO PLANS FOR ACTUAL SLOPE)
- O'HAGIN ATTIC VENT, PAINT TO MATCH ROOF COLOR. (REFER TO EXTERIOR ELEVATIONS FOR COLORS AND MATERIALS.)
- WALL BELOW
- GUTTER, CONNECT TO DOWNSPOUT
- DOWNSPOUT, TO ROOF OR SPLASHBLOCK BELOW U.N.O.
- FUTURE SOLAR ZONE. REFER TO SOLAR READY NOTES ON SHEET G-101.

These plans are only to be used within City of Carpinteria jurisdiction. By using these standard plans ("ADU Plans") in accordance with the City of Carpinteria's Pre-Approved ADU Construction Plans Program, the User agrees to defend, indemnify, and hold harmless the City of Carpinteria and RRM from any and all claims, liabilities, suits, and demands on account of any injury, damage, or loss to persons or property, including injury or death, or economic losses, arising out of the use of these ADU Plans. The use of these ADU Plans does not eliminate or reduce the user's responsibility to verify any and all information herein.

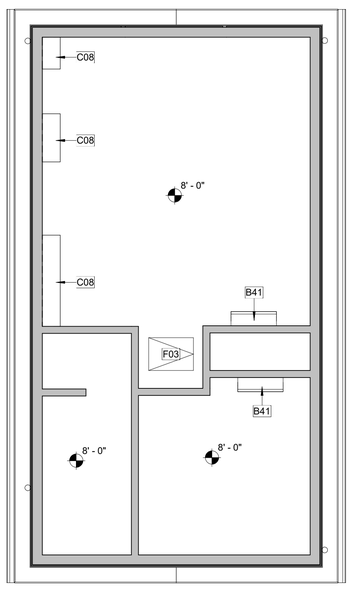

3 PLAN 2 - REFLECTED CEILING PLAN - COASTAL COTTAGE
A1-201|A2-122 1/4" = 1'-0"

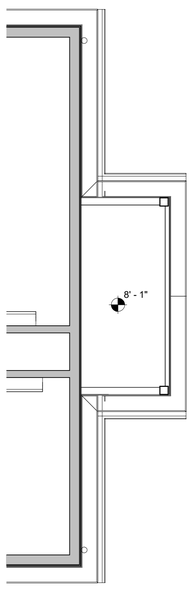

4 PLAN 2 - PORCH OPTION
A1-201|A2-122 1/4" = 1'-0"

RCP GENERAL NOTES

1. REFER TO GENERAL NOTES SHEET G-101 AND G-102 FOR ADDITIONAL REQUIREMENTS.
2. REFER TO ELECTRICAL PLANS FOR FURTHER INFORMATION.
3. REFER TO MECHANICAL PLANS FOR FURTHER INFORMATION.
4. REFER TO DETAILS FOR FLOOR/CEILING ASSEMBLIES.
5. HEIGHT OF CEILINGS SHALL BE MEASURED FROM TOP OF SLAB TO FINISH FACE OF GWB OR FACE OF CEILING GRID AS INDICATED ON THE REFLECTED CEILING PLAN, UNO. 7' 0" MINIMUM CEILING IN HABITABLE SPACES AND HALLWAYS. ***CRC R305.1***
6. CONTRACTOR TO VERIFY DEPTH OF SOFFITS AND HOLD TIGHT TO PLUMBING, SPRINKLERS, ELECTRICAL AND MECHANICAL DUCTS
7. SEE MECHANICAL DRAWINGS FOR MECH. ACCESS PANELS. PAINT TO MATCH CEILING
8. AT DROPPED GWB SOFFITS/GWB BEAMS, PROVIDE C-STUDS AS VERTICAL SUPPORTS AT EACH SIDE OF THE SOFFIT/BEAM AND DIAGONAL BRACING FOR WRACKING. IF CEILING JOIST SPACING DIFFERS FROM FLOOR THEN BLOCKING BETWEEN THE FLOOR FRAMING MAY BE UTILIZED TO ATTACH THE
9. ALL LIGHT FIXTURES ARE TO BE INSTALLED ACCORDING TO THE ARCHITECTURAL REFLECTED CEILING PLAN. ARCHITECT TO REVIEW CEILING LAYOUT INCLUDING BULKHEADS AND GRID PRIOR TO INSTALLATION.
10. SEE ELECTRICAL PLANS FOR LIGHTING LOCATIONS AND SPECIFICATIONS, AND EXIT SIGN LOCATIONS.

LEGEND

- XX'-X" — CEILING HEIGHT (SEE PLAN FOR ACTUAL HEIGHTS)
- INTERIOR - GYPSUM BOARD CEILING
- INTERIOR - GYPSUM BOARD SOFFIT
- INTERIOR - ACOUSTICAL TILE CEILING
- EXTERIOR - CEMENT PLASTER SOFFIT
- MECHANICAL EQUIPMENT, REFER TO MECHANICAL PLANS
- LIGHT FIXTURE, REFER TO ELECTRICAL PLANS

CARPINTERIA ADU PROTOTYPES

SANTA BARBARA COUNTY, CA
ROOF PLANS & REFLECTED CEILING PLANS - COASTAL COTTAGE

DATE
0218/23

SHEET
A2-122

5/11/2023 4:50:49 PM
C:\Users\mjenkins\OneDrive - RRM Design Group\Documents\2727-01 Carpinteria ADU_Public Set_mjenkins.rvt

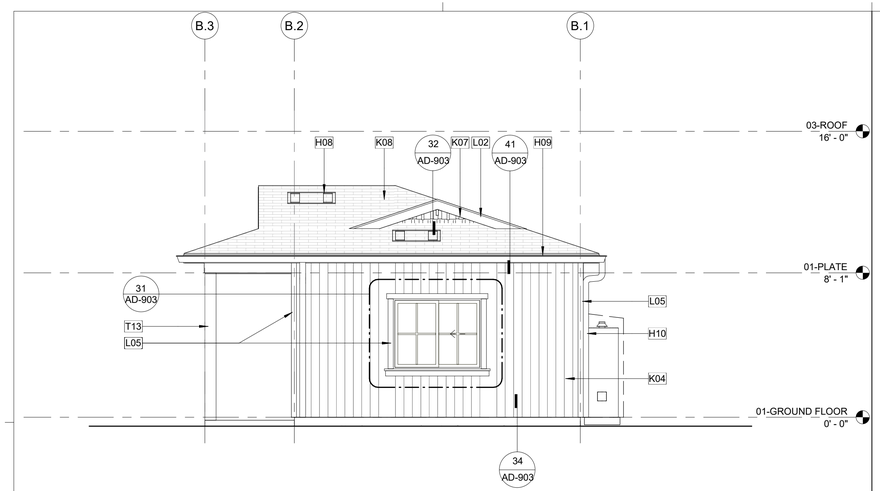

2 PLAN 2 - RIGHT - CALIFORNIA RANCH

A2-101|A2-201 1/4" = 1'-0"

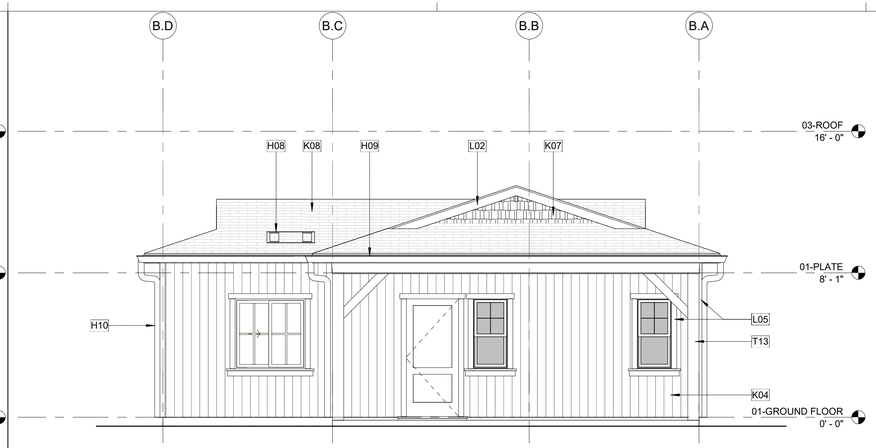

1 PLAN 2 - FRONT - CALIFORNIA RANCH

A2-101|A2-201 1/4" = 1'-0"

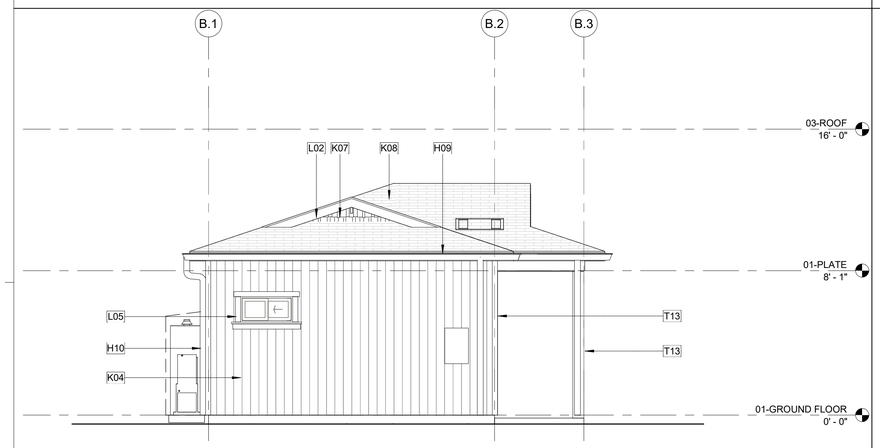

4 PLAN 2 - LEFT - CALIFORNIA RANCH

A2-101|A2-201 1/4" = 1'-0"

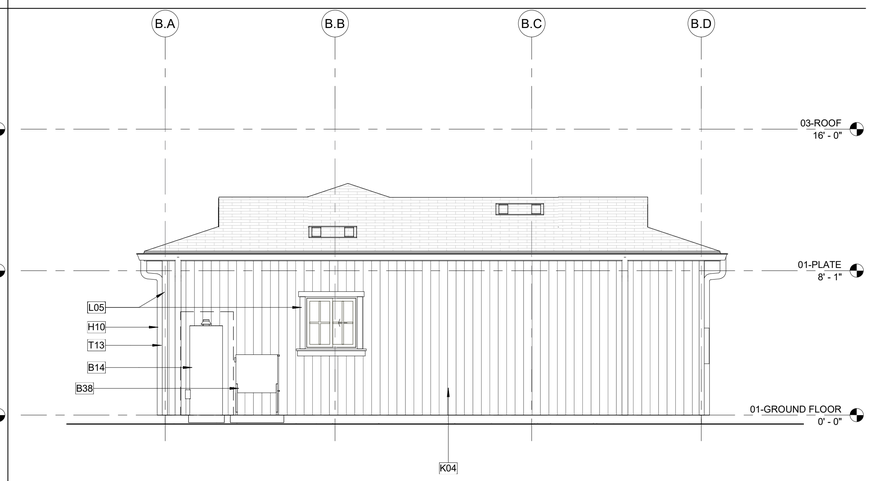

3 PLAN 2 - REAR - CALIFORNIA RANCH

A2-101|A2-201 1/4" = 1'-0"

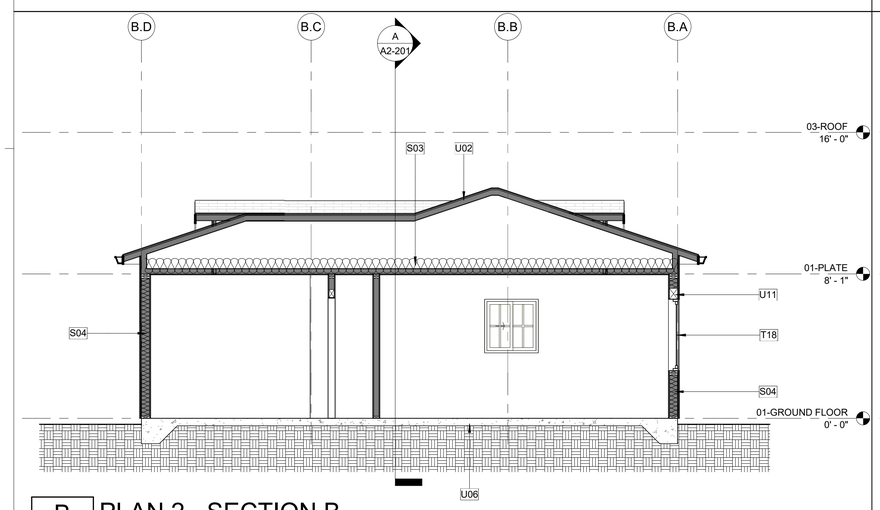

B PLAN 2 - SECTION B

A2-101|A2-201 1/4" = 1'-0"

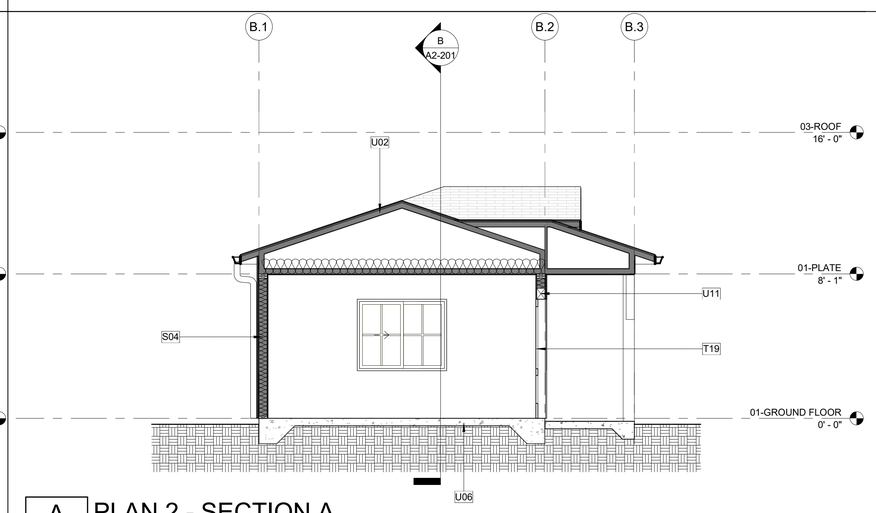

A PLAN 2 - SECTION A

A2-101|A2-201 1/4" = 1'-0"

GENERAL ELEVATION NOTES

1. REFER TO GENERAL NOTES SHEET G-102 FOR ADDITIONAL REQUIREMENTS
2. SEE DETAILS FOR ADDITIONAL INFORMATION AND REQUIREMENTS.
3. REFER TO ROOF PLAN FOR OVERHANGS. FASCIA PER DETAILS. PROVIDE ALUMINUM GUTTER. SEE ROOF PLAN FOR APPROXIMATE DOWNSPOUT LOCATIONS, U.N.O.
4. REFER TO DOOR AND WINDOW SCHEDULES AND TYPES FOR DOOR AND WINDOW INFORMATION.
5. THE NOMINAL THICKNESS AND ATTACHMENT OF EXTERIOR WALL COVERINGS SHALL BE IN ACCORDANCE WITH CRC TABLE R703.3(1).
6. EXTERIOR PLASTER (STUCCO) INSTALLATION SHALL COMPLY WITH THE PROVISIONS OF CRC R703.7 AND COMPLIANCE WITH ASTM C926 AND ASTM C1063, STANDARD SPECIFICATIONS FOR INSTALLATION OF LATHING AND FURRING TO RECEIVE INTERIOR AND EXTERIOR PORTLAND CEMENT-BASED PLASTER, INCLUDING INSTALLATION OF CONTROL JOINTS.
7. GYPSUM SHEATHING SHALL BE ATTACHED TO EXTERIOR WALLS IN ACCORDANCE WITH CRC TABLE R602.3.
8. CLADDING ATTACHMENT OVER FOAM SHEATHING TO WOOD FRAMING IN ACCORDANCE WITH CRC R703.15. REFER TO CRC R703.8 FOR ANCHORED MASONRY OR STONE VENEER INSTALLED OVER FOAM SHEATHING.

KEYNOTES

B14	50 GALLON TANK TYPE ELECTRIC WATER HEATER. REFER TO TITLE 24 FOR ADDITIONAL INFORMATION. PROVIDE CONCRETE PAD MIN. 6" LARGER THAN UNIT IN EACH DIRECTION. 3" MIN. ABOVE GRADE. STRAPPING DETAIL 51/AD-902. PROVIDE WHETHER PROOF ENCLOSURE AT EXTERIOR LOCATIONS
B38	MULTI-ZONE HEAT PUMP CONDENSING UNIT. REFER TO PLANS FOR LOCATION OF INDOOR FAN FAN COIL UNITS. REFER TO TITLE 24 FOR ADDITIONAL INFORMATION. PROVIDE CONCRETE PAD MIN. 6" LARGER THAN UNIT IN EACH DIRECTION, 3" MIN. ABOVE GRADE.
H08	ATTIC VENT. PAINT FINISH TO MATCH ROOF COLOR. REFER TO COLORS AND MATERIALS.
H09	GUTTER. CONNECT TO DOWNSPOUT. PROVIDE MEANS TO PREVENT ACCUMULATION OF LEAVES AND DEBRIS IN GUTTER PER CRC R327.5.4
H10	DOWNSPOUT
K04	FIBER CEMENT BOARD AND BATTEN SIDING, IN COMPLIANCE WITH 2019 CRC R337
K07	FIBER CEMENT SHINGLE SIDING - REFER TO COLOR SCHEME ON COLOR MATERIALS BOARD ON SHEET G-110 & G-111.
K08	CLASS A ASPHALT COMPOSITE ROOF SHINGLES. GAF TIMBERLINE HD OR APROVED EQUAL.
L02	2x8 FIBER CEMENT FASCIA.
L05	1X4 FIBER CEMENT TRIM.
S03	ROOF INSULATION. REFER TO TITLE 24 (R-19 MIN.).
S04	2X6 WALL INSULATION. REFER TO TITLE 24 (R-21 MIN.)
T13	8x8 POST, REFER TO STRUCTURAL
T18	WINDOW PER SCHEDULE.
T19	DOOR PER SCHEDULE.
U02	WOOD TRUSS. REFER TO STRUCTURAL.
U06	CONCRETE SLAB FOUNDATION
U11	WOOD BEAM / HEADER, REFER TO STRUCTURAL.

LEGEND

3-COAT CEMENT PLASTER (COLOR TO MATCH PRIMARY RESIDENCE)

CEMENTITOUS LAP SIDING (COLOR AND WIDTH TO MATCH PRIMARY RESIDENCE)

CEMENTITOUS BOARD AND BATTEN SIDING (COLOR TO MATCH PRIMARY RESIDENCE)

These plans are only to be used within City of Carpinteria jurisdiction. By using these standard plans ("ADU Plans") in accordance with the City of Carpinteria's Pre-Approved ADU Construction Plans Program, the User agrees to defend, indemnify, and hold harmless the City of Carpinteria and RRM from any and all claims, liabilities, suits, and demands on account of any injury, damage, or loss to persons or property, including injury or death, or economic losses, arising out of the use of these ADU Plans. The use of these ADU Plans does not eliminate or reduce the user's responsibility to verify any and all information herein.

CARPINTERIA ADU PROTOTYPES

SANTA BARBARA COUNTY, CA

EXTERIOR ELEVATIONS & BUILDING SECTIONS - CALIFORNIA RANCH

DATE

0218/23

SHEET

A2-201

5/11/2023 4:50:41 PM
C:\Users\mjenkins\OneDrive - RRM Design Group\Documents\2727-01 Carpinteria ADU_Public Set_mjenkins.rvt

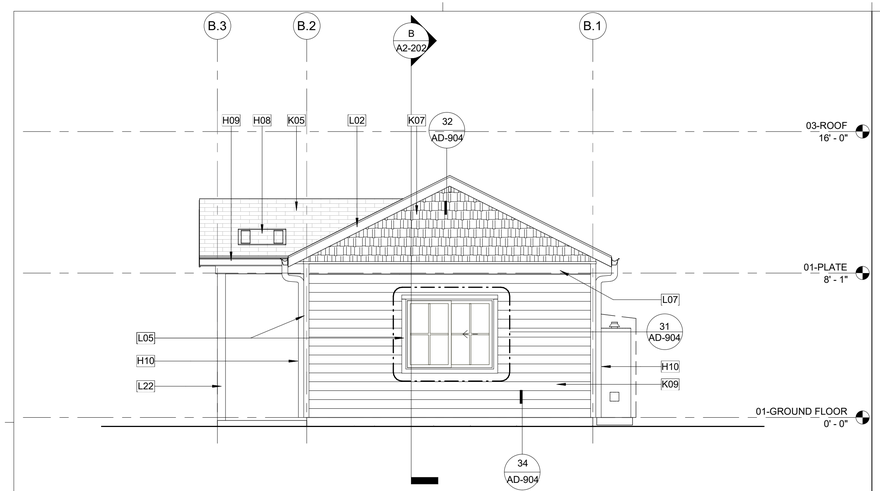

2 PLAN 2 - RIGHT - COASTAL COTTAGE

A2-101|A2-202 1/4" = 1'-0"

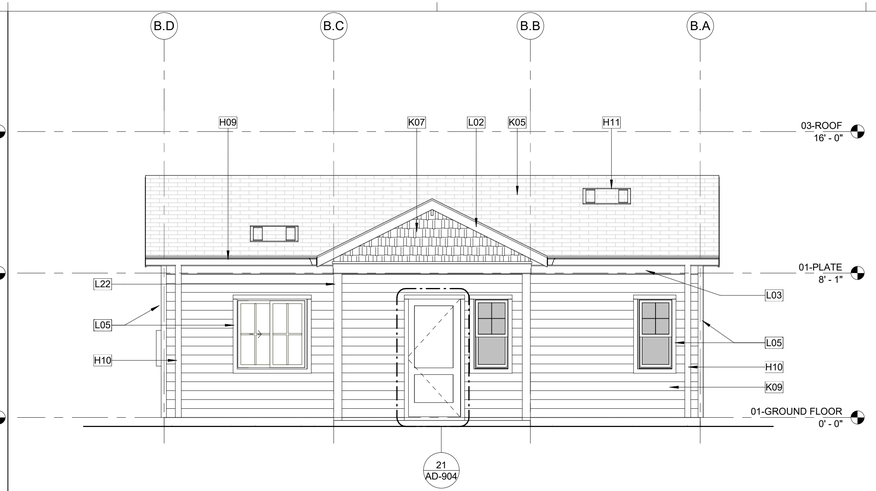

1 PLAN 2 - FRONT - COASTAL COTTAGE

A2-101|A2-202 1/4" = 1'-0"

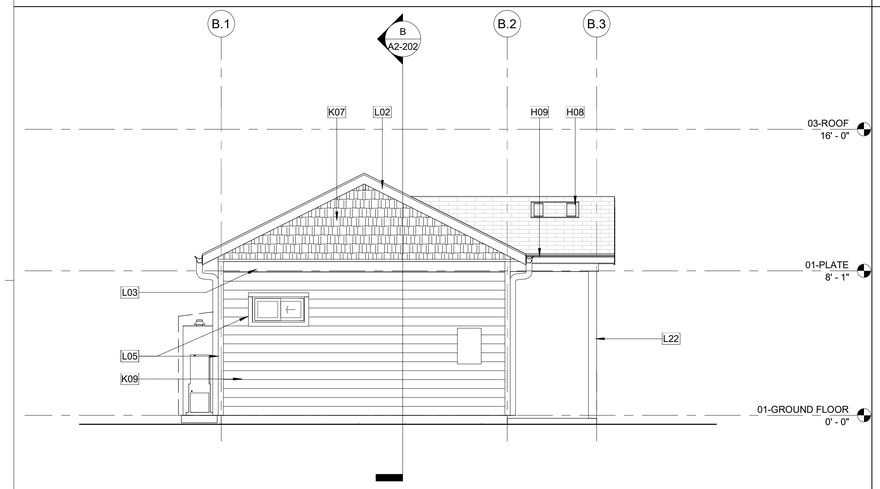

4 PLAN 2 - LEFT - COASTAL COTTAGE

A2-101|A2-202 1/4" = 1'-0"

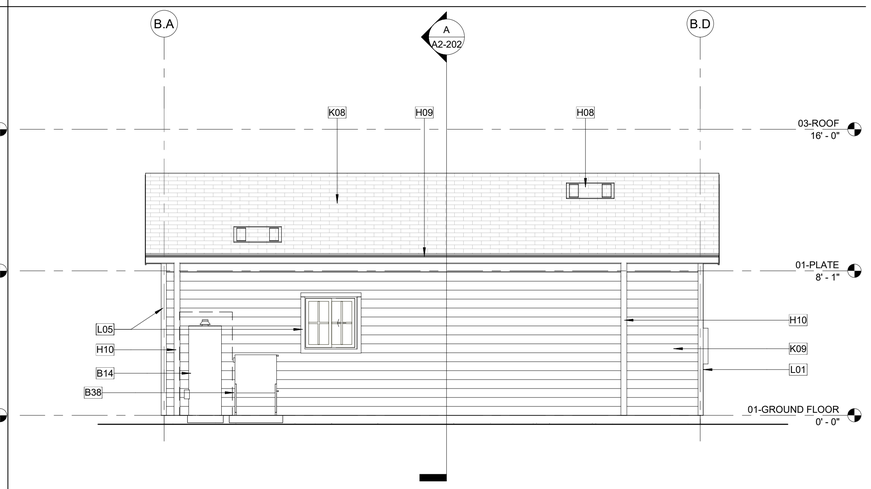

3 PLAN 2 - REAR - COASTAL COTTAGE

A2-101|A2-202 1/4" = 1'-0"

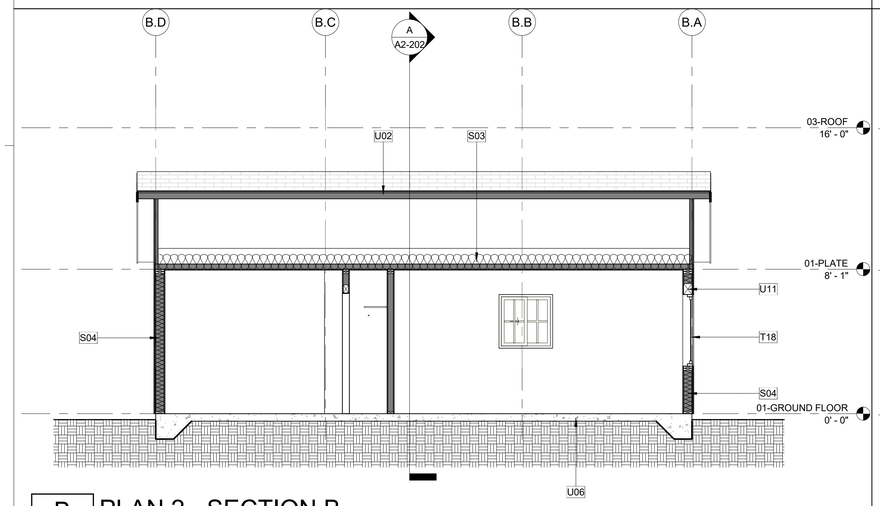

B PLAN 2 - SECTION B

A2-101|A2-202 1/4" = 1'-0"

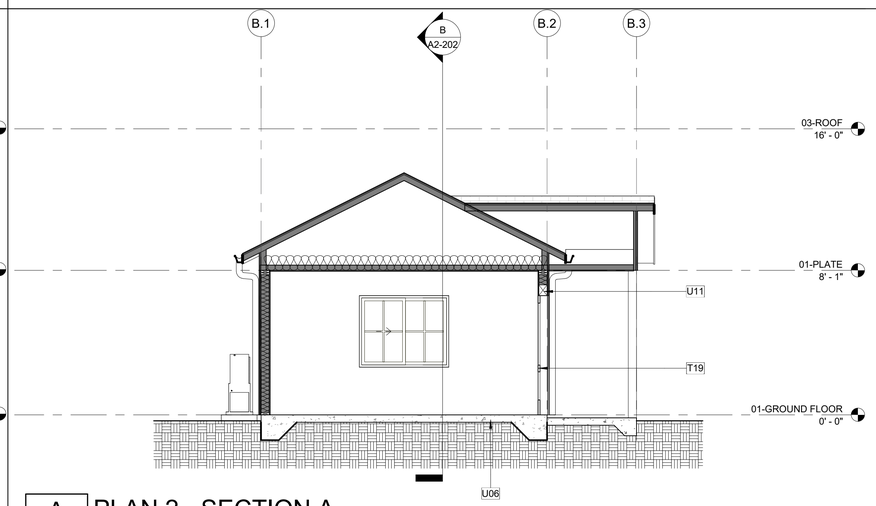

A PLAN 2 - SECTION A

A2-101|A2-202 1/4" = 1'-0"

GENERAL ELEVATION NOTES

1. REFER TO GENERAL NOTES SHEET G-102 FOR ADDITIONAL REQUIREMENTS
2. SEE DETAILS FOR ADDITIONAL INFORMATION AND REQUIREMENTS.
3. REFER TO ROOF PLAN FOR OVERHANGS. FASCIA PER DETAILS. PROVIDE ALUMINUM GUTTER. SEE ROOF PLAN FOR APPROXIMATE DOWNSPOUT LOCATIONS, U.N.O.
4. REFER TO DOOR AND WINDOW SCHEDULES AND TYPES FOR DOOR AND WINDOW INFORMATION.
5. THE NOMINAL THICKNESS AND ATTACHMENT OF EXTERIOR WALL COVERINGS SHALL BE IN ACCORDANCE WITH CRC TABLE R703.3(1).
6. EXTERIOR PLASTER (STUCCO) INSTALLATION SHALL COMPLY WITH THE PROVISIONS OF CRC R703.7 AND COMPLIANCE WITH ASTM C926 AND ASTM C1063, STANDARD SPECIFICATIONS FOR INSTALLATION OF LATHING AND FURRING TO RECEIVE INTERIOR AND EXTERIOR PORTLAND CEMENT-BASED PLASTER, INCLUDING INSTALLATION OF CONTROL JOINTS.
7. GYPSUM SHEATHING SHALL BE ATTACHED TO EXTERIOR WALLS IN ACCORDANCE WITH CRC TABLE R602.3.
8. CLADDING ATTACHMENT OVER FOAM SHEATHING TO WOOD FRAMING IN ACCORDANCE WITH CRC R703.15. REFER TO CRC R703.8 FOR ANCHORED MASONRY OR STONE VENEER INSTALLED OVER FOAM SHEATHING.

KEYNOTES

B14	50 GALLON TANK TYPE ELECTRIC WATER HEATER. REFER TO TITLE 24 FOR ADDITIONAL INFORMATION. PROVIDE CONCRETE PAD MIN. 6" LARGER THAN UNIT IN EACH DIRECTION. 3" MIN. ABOVE GRADE. STRAPPING DETAIL 51/AD-902. PROVIDE WHETHER PROOF ENCLOSURE AT EXTERIOR LOCATIONS
B38	MULTI-ZONE HEAT PUMP CONDENSING UNIT. REFER TO PLANS FOR LOCATION OF INDOOR FAN FAN COIL UNITS. REFER TO TITLE 24 FOR ADDITIONAL INFORMATION. PROVIDE CONCRETE PAD MIN. 6" LARGER THAN UNIT IN EACH DIRECTION, 3" MIN. ABOVE GRADE.
H08	ATTIC VENT. PAINT FINISH TO MATCH ROOF COLOR. REFER TO COLORS AND MATERIALS.
H09	GUTTER. CONNECT TO DOWNSPOUT. PROVIDE MEANS TO PREVENT ACCUMULATION OF LEAVES AND DEBRIS IN GUTTER PER CRC R327.5.4
H10	DOWNSPOUT
H11	ATTIC VENT IN OPEN EAVE
K05	CLASS A ASPHALT COMPOSITE ROOF SHINGLES. GAF TIMBERLINE HD OR APROVED EQUAL. THE USE OF CLASS A TILE ROOFING IS ALSO ALLOWED AND HAS BEEN ACCOUNTED FOR IN STRUCTURAL ROOF LOADS.
K07	FIBER CEMENT SHINGLE SIDING - REFER TO COLOR SCHEME ON COLOR MATERIALS BOARD ON SHEET G-110 & G-111.
K08	CLASS A ASPHALT COMPOSITE ROOF SHINGLES. GAF TIMBERLINE HD OR APROVED EQUAL.
K09	FIBER CEMENT HOROZONTAL SIDING, IN COMPLIANCE WITH 2019 CRC R337
L01	1x4 FASCIA. PRIME ALL SIDES.
L02	2x8 FIBER CEMENT FASCIA.
L03	1x10 FASCIA. PRIME ALL SIDES.
L05	1X4 FIBER CEMENT TRIM.
L07	1x10 FIBER CEMENT TRIM. PRIME ALL SIDES.
L22	6x6 STRUCTURAL COLUMN
S03	ROOF INSULATION. REFER TO TITLE 24 (R-19 MIN.).
S04	2X6 WALL INSULATION. REFER TO TITLE 24 (R-21 MIN.)
T18	WINDOW PER SCHEDULE.
T19	DOOR PER SCHEDULE.
U02	WOOD TRUSS. REFER TO STRUCTURAL.
U06	CONCRETE SLAB FOUNDATION
U11	WOOD BEAM / HEADER, REFER TO STRUCTURAL.

LEGEND

- 3-COAT CEMENT PLASTER (COLOR TO MATCH PRIMARY RESIDENCE)
- CEMENTITOUS LAP SIDING (COLOR AND WIDTH TO MATCH PRIMARY RESIDENCE)
- CEMENTITOUS BOARD AND BATTEN SIDING (COLOR TO MATCH PRIMARY RESIDENCE)

These plans are only to be used within City of Carpinteria jurisdiction. By using these standard plans ("ADU Plans") in accordance with the City of Carpinteria's Pre-Approved ADU Construction Plans Program, the User agrees to defend, indemnify, and hold harmless the City of Carpinteria and RRM from any and all claims, liabilities, suits, and demands on account of any injury, damage, or loss to persons or property, including injury or death, or economic losses, arising out of the use of these ADU Plans. The use of these ADU Plans does not eliminate or reduce the user's responsibility to verify any and all information herein.

CARPINTERIA ADU PROTOTYPES

SANTA BARBARA COUNTY, CA

EXTERIOR ELEVATIONS & BUILDING SECTIONS - COASTAL COTTAGE

DATE
0218/23

SHEET
A2-202

5/11/2023 4:50:42 PM
C:\Users\mjenkins\OneDrive - RRM Design Group\Documents\2727-01 Carpinteria ADU_Public Set_mjenkins.rvt

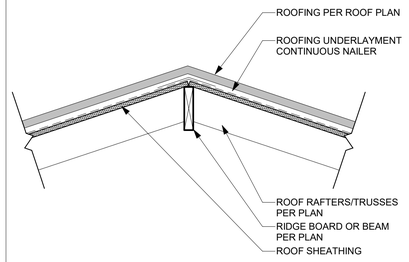

21 HIP/RIDGE
AD-902 1" = 1'-0"

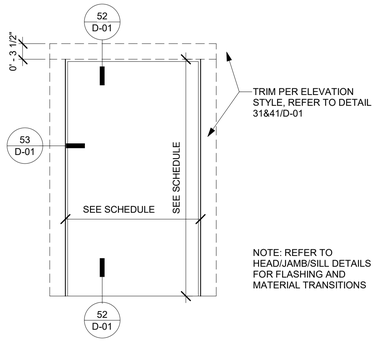

11 DOOR TRIM - SLIDING GLASS Copy 1
AD-902 3/4" = 1'-0"

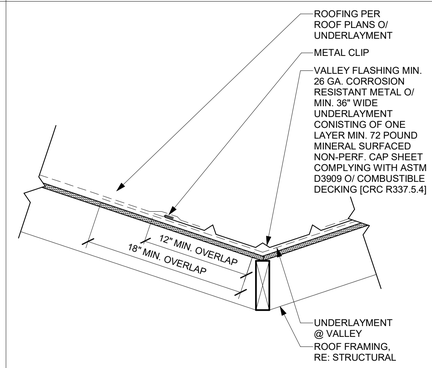

22 VALLEY FLASHING
AD-902 1 1/2" = 1'-0"

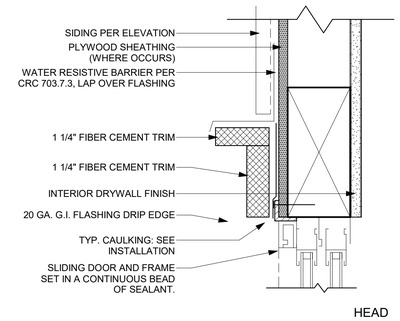

12 DOOR-SLIDING GLASS
AD-902 3" = 1'-0"

GENERAL NOTES:
1. REFER TO 2019 CPC FOR COMPLETE INFORMATION
2. FINISH FLOOR TO HAVE 1/4" MIN. TO 1/2" MAX SLOPE TO DRAIN PER FOOT.
3. FINISH HEIGHT OF DAM TO BE AT LEAST 2" (50.8mm) ABOVE HIGH POINT OF DRAIN.

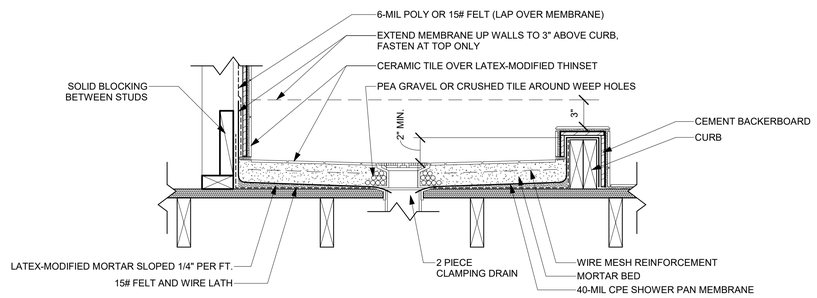

33 SHOWER PAN
AD-902 1 1/2" = 1'-0"

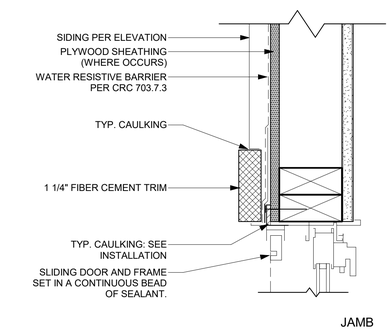

13 DOOR-SLIDING GLASS
AD-902 3" = 1'-0"

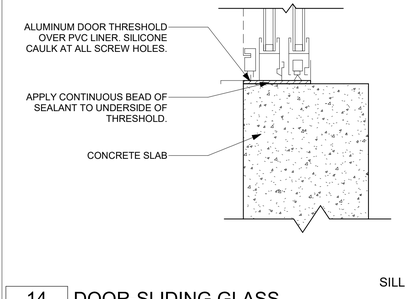

14 DOOR-SLIDING GLASS
AD-902 3" = 1'-0"

These plans are only to be used within City of Carpinteria jurisdiction. By using these standard plans ("ADU Plans") in accordance with the City of Carpinteria's Pre-Approved ADU Construction Plans Program, the User agrees to defend, indemnify, and hold harmless the City of Carpinteria and RRM from any and all claims, liabilities, suits, and demands on account of any injury, damage, or loss to persons or property, including injury or death, or economic losses, arising out of the use of these ADU Plans. The use of these ADU Plans does not eliminate or reduce the user's responsibility to verify any and all information herein.

CARPINTERIA ADU PROTOTYPES

SANTA BARBARA COUNTY, CA

ARCHITECTURAL DETAILS - COMMON

DATE
0218/23

SHEET
AD-902

5/11/2023 4:50:49 PM
C:\Users\mjenkins\OneDrive - RRM Design Group\Documents\2727-01 Carpinteria ADU_Public Set_mjenkins.rvt

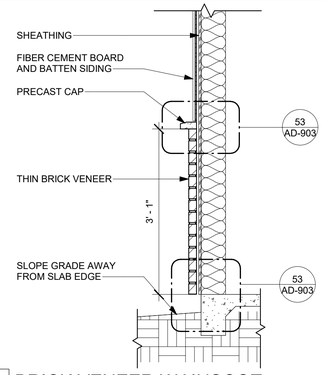

51 BRICK VENEER WAINSCOT
AD-903 3/4" = 1'-0"

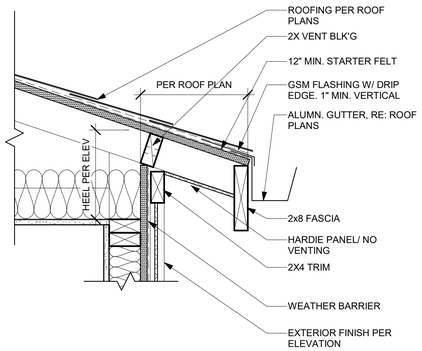

41 EAVE @ FIBER CEMENT
A1-201 AD-903 1 1/2" = 1'-0"

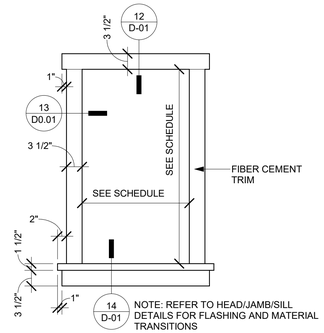

31 WINDOW TRIM
A1-201 AD-903 3/4" = 1'-0"

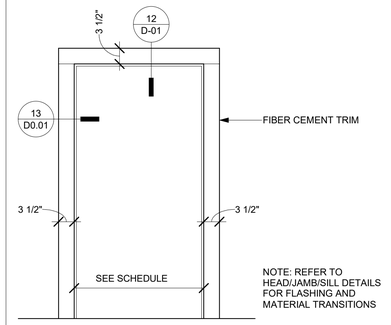

21 DOOR TRIM
A1-201 AD-903 3/4" = 1'-0"

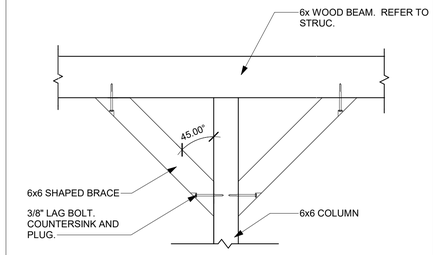

11 BRACE - CALIFORNIA RANCH
AD-903 AD-903 3/4" = 1'-0"

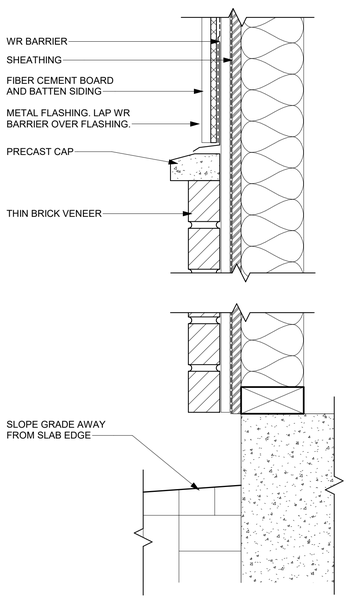

53 BRICK VENEER WAINSCOT
AD-903 AD-903 3" = 1'-0"

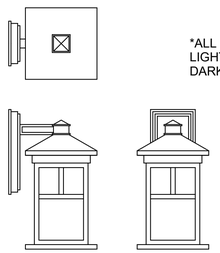

*ALL EXTERIOR LIGHTING MUST BE DARK SKY COMPLIANT

FORTE LIGHTING - BLACK FINISH WITH HONEY GLASS PANELS

OR EQUAL DARK SKY COMPLIANT FIXTURE PER ZONING REGULATIONS SECTION 17.70.100.

-- TYP. TRADITIONAL LIGHT FIXTURE
AD-903 1 1/2" = 1'-0"

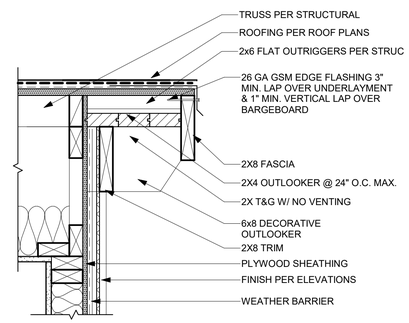

32 RAKE @ FIBER CEMENT
A2-201 AD-903 1 1/2" = 1'-0"

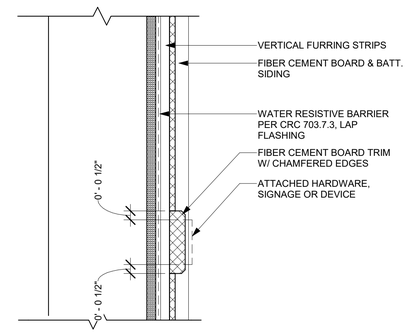

22 FIBER CEMENT MOUNTING PAD
AD-903 3" = 1'-0"

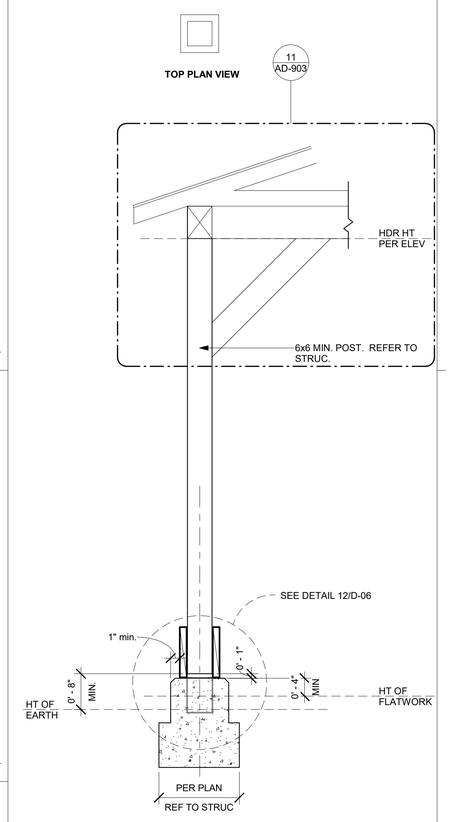

POSTS AND COLUMNS THAT ARE EITHER EXPOSED TO THE WEATHER OR LOCATED IN BASEMENTS OR CELLARS, SUPPORTED BY CONCRETE PIERS OR METAL PEDESTALS, SHALL BE PROJECTED AT LEAST 1 INCH ABOVE THE SLAB OR DECK AND 8 INCHES ABOVE EXPOSED EARTH AND SHALL BE SEPARATED BY AN IMPERVIOUS MOISTURE BARRIER (ALTERNATE, PROVIDE A PRESERVATIVE-TREATED WOOD POST OR COLUMN). 2304.12.2.2 & EXCEPTION 1 CBC

14 POST-CALIFORNIA RANCH
AD-903 3/4" = 1'-0"

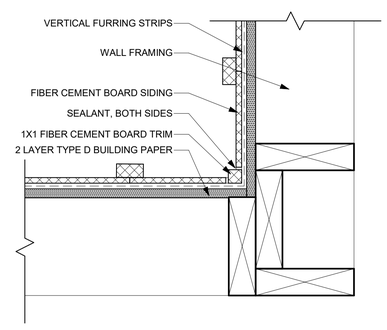

33 FIBER CEMENT-INSIDE CORNER TRIM
AD-903 3" = 1'-0"

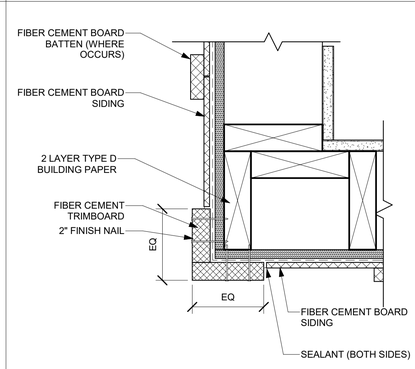

23 FIBER CEMENT-OUTSIDE CORNER
AD-903 3" = 1'-0"

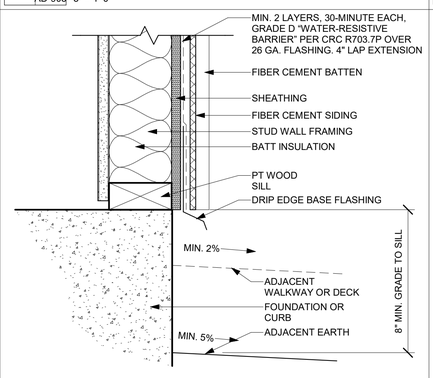

34 TYP SIDING WEEP SCREED DETAIL
A1-201 AD-903 3" = 1'-0"

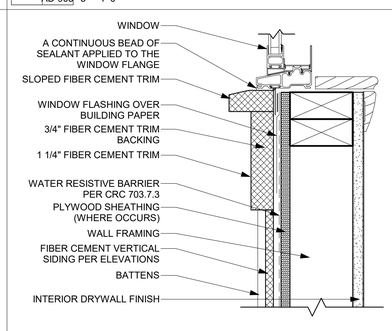

NOTE: ALL WINDOW FLASHING SHALL COMPLY WITH MANUFACTURER/INDUSTRY STANDARDS AAMA 2400-02

24 TYP. WINDOW SILL-BOARD AND BATT.
AD-903 3" = 1'-0"

These plans are only to be used within City of Carpinteria jurisdiction. By using these standard plans ("ADU Plans") in accordance with the City of Carpinteria's Pre-Approved ADU Construction Plans Program, the User agrees to defend, indemnify, and hold harmless the City of Carpinteria and RRM from any and all claims, liabilities, suits, and demands on account of any injury, damage, or loss to persons or property, including injury or death, or economic losses, arising out of the use of these ADU Plans. The use of these ADU Plans does not eliminate or reduce the user's responsibility to verify any and all information herein.

CARPINTERIA ADU PROTOTYPES

SANTA BARBARA COUNTY, CA

ARCHITECTURAL DETAILS - CALIFORNIA RANCH

DATE
0218/23

SHEET
AD-903

5/11/2023 4:50:43 PM
C:\Users\mjenkins\OneDrive - RRM Design Group\Documents\2727-01 Carpinteria ADU_Public Set_mjenkins.rvt

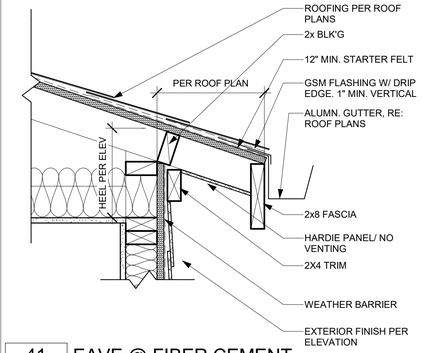

41 EAVE @ FIBER CEMENT
A1-202AD-904 1 1/2" = 1'-0"

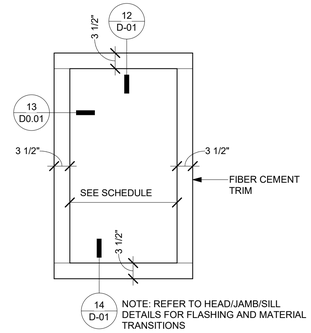

31 WINDOW TRIM
A2-202AD-904 3/4" = 1'-0"

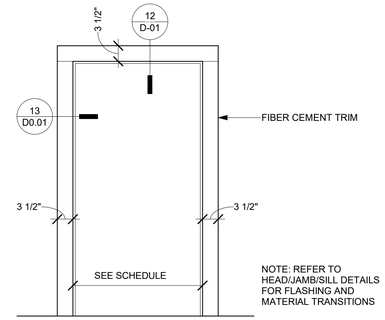

21 DOOR TRIM
A1-202AD-904 3/4" = 1'-0"

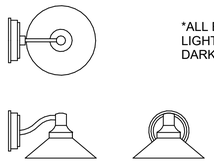

*ALL EXTERIOR LIGHTING MUST BE DARK SKY COMPLIANT

THE GREAT OUTDOORS - WALL MOUNT
KIRKHAM ASPEN BROZE
(8102-A138-L)

OR EQUAL DARK SKY COMPLIANT FIXTURE PER ZONING REGULATIONS SECTION 17.70.100.

42 TYP. LIGHTING FIXTURE
AD-904 1 1/2" = 1'-0"

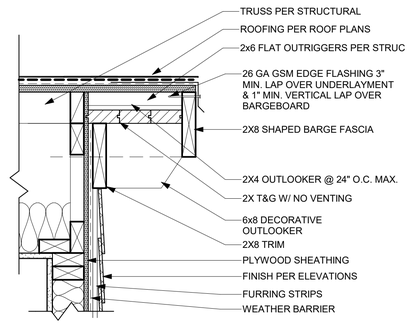

32 RAKE @ PLASTER
A1-202AD-904 1 1/2" = 1'-0"

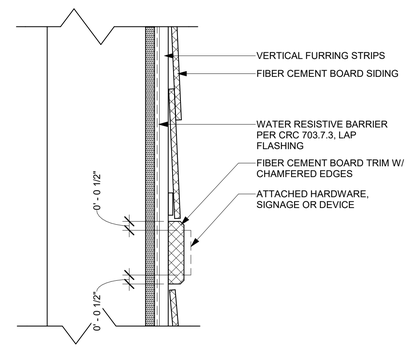

22 FIBER CEMENT MOUNTING PAD
AD-904 3" = 1'-0"

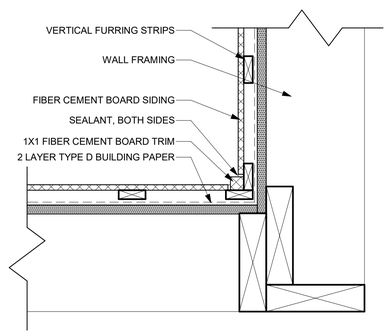

33 FIBER CEMENT-INSIDE CORNER TRIM
A1-202AD-904 3" = 1'-0"

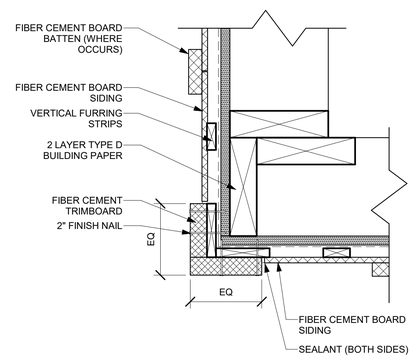

23 FIBER CEMENT-OUTSIDE CORNER
AD-904 3" = 1'-0"

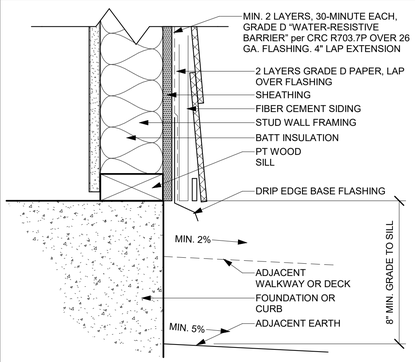

34 TYP SIDING WEEP SCREED DETAIL
A1-202AD-904 3" = 1'-0"

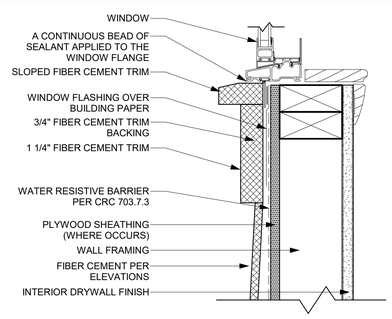

NOTE: ALL WINDOW FLASHING SHALL COMPLY WITH MANUFACTURER/INDUSTRY STANDARDS AAMA 2400-02

24 TYP. WINDOW SILL-FIBER CEMENT
AD-904 3" = 1'-0"

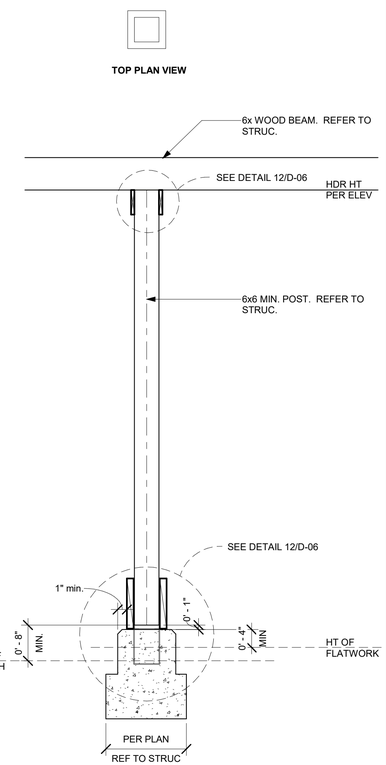

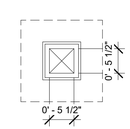

POSTS AND COLUMNS THAT ARE EITHER EXPOSED TO THE WEATHER OR LOCATED IN BASEMENTS OR CELLARS, SUPPORTED BY CONCRETE PIERS OR METAL PEDESTALS, SHALL BE PROJECTED AT LEAST 1 INCH ABOVE THE SLAB OR DECK AND 8 INCHES ABOVE EXPOSED EARTH AND SHALL BE SEPARATED BY AN IMPERVIOUS MOISTURE BARRIER (ALTERNATE, PROVIDE A PRESERVATIVE-TREATED WOOD POST OR COLUMN). 2304.12.2.2 & EXCEPTION 1 CBC

14 POST-COASTAL COTTAGE
AD-904 3/4" = 1'-0"

These plans are only to be used within City of Carpinteria jurisdiction. By using these standard plans ("ADU Plans") in accordance with the City of Carpinteria's Pre-Approved ADU Construction Plans Program, the User agrees to defend, indemnify, and hold harmless the City of Carpinteria and RRM from any and all claims, liabilities, suits, and demands on account of any injury, damage, or loss to persons or property, including injury or death, or economic losses, arising out of the use of these ADU Plans. The use of these ADU Plans does not eliminate or reduce the user's responsibility to verify any and all information herein.

CARPINTERIA ADU PROTOTYPES

SANTA BARBARA COUNTY, CA

ARCHITECTURAL DETAILS - COASTAL COTTAGE

DATE
0218/23

SHEET
AD-904

5/11/2023 4:50:44 PM
C:\Users\mjenkins\OneDrive - RRM Design Group\Documents\2727-01 Carpinteria ADU_Public Set_mjenkins.rvt

SYMBOLS

- DETAIL REFERENCE BUBBLE WITH LEADER
- DETAIL REFERENCE BUBBLE
- FULL HEIGHT SECTION INDICATOR
- ELEVATION OF WALL OR FRAME
- NORTH ARROW
- BOT OF EL = (-X'-X") — TOP/BOTTOM OF ELEVATIONS
- SLOPE
- WELDED WIRE FABRIC (WWF LAYER)
- STEPPED SURFACE; FLOOR DEPRESSION
- SLOPED SURFACE
- S — S — STEPPED FOOTING
- SB — SB — BOTTOM STEPPED FOOTING
- XX'-X" / X — INDICATES SHEAR WALL TYPE AND LENGTH, PER SHEAR WALL SCHEDULE
- INDICATES SPAN AND DIRECTION OF PREFABRICATED ROOF TRUSS (BY OTHERS)
- XX — INDICATES SPAN AND DIRECTION OF ROOF RAFTER OR FLOOR JOIST WITH WEB STIFFENER
- XX — INDICATES SPAN AND DIRECTION OF ROOF RAFTER OR FLOOR JOIST
- INDICATES EXTENTS OF FRAMING OR OTHER STRUCTURAL ELEMENT
- INDICATES HEADER @ OPENING PER HEADER SCHEDULE
- EARTH LAYER
- INDICATES SAND OR GROUT
- INDICATES GRAVEL
- STEEL IN CROSS SECTION
- INDICATES BEARING WALL
- SHADED AREA INDICATES CALIFORNIA FRAMING
- SHADED AREA INDICATES FOOTPRINT OF FLOOR ABOVE
- STEEL HSS TUBE COLUMN
- STEEL HSS OR PIPE COLUMN
- WIDE FLANGE STEEL COLUMN
- WOOD POST
- (X) — INDICATES TOP PLATE SPLICE NAILING PER SCHEDULE
- Ix — INDICATES SHEAR WALL STRAP / HOLDOWN TYPE PER SCHEDULE
- F1 — INDICATES PAD FOOTING TYPE PER SCHEDULE
- C1 — INDICATES CONTINUOUS FOOTING TYPE PER SCHEDULE
- ANGLE BRACE
- (2L) — DOUBLE ANGLE BRACE
- DRAG STRUT CONNECTION
- FULL HEIGHT STIFFENER CONNECTION
- MOMENT CONNECTION
- MEMBER SPLICE
- (+3") — TOP OF STEEL ± ELEVATION
- [X] — NUMBER OF EVENLY SPACED SHEAR STUDS
- [X–Y–Z] — SPECIAL STUD SPACING SEE TYPICAL STEEL DETAILS
- <3/4> — BEAM CAMBER AT MID-SPAN

WALL TYPES

- INDICATES PLYWOOD SIDE FOR SHEARWALL
- INDICATES BEARING WOOD WALL BELOW
- INDICATES BEARING WOOD WALL ABOVE
- INDICATES NON-BEARING WOOD WALL BELOW
- INDICATES NON-BEARING WOOD WALL ABOVE
- INDICATES EXISTING BEARING WOOD WALL
- INDICATES EXISTING NON-BEARING WOOD WALL
- INDICATES BEARING CMU WALL BELOW
- INDICATES BEARING CMU WALL ABOVE
- INDICATES NON-BEARING CMU WALL BELOW
- INDICATES NON-BEARING CMU WALL ABOVE
- INDICATES EXISTING BEARING CMU WALL
- INDICATES EXISTING NON-BEARING CMU WALL
- INDICATES BEARING CONCRETE WALL BELOW
- INDICATES BEARING CONCRETE WALL ABOVE
- INDICATES NON-BEARING CONCRETE WALL BELOW
- INDICATES NON-BEARING CONCRETE WALL ABOVE
- INDICATES EXISTING BEARING CONCRETE WALL
- INDICATES EXISTING NON-BEARING CONCRETE WALL

SHEET INDEX

S2-101	SHEET INDEX, ABBREVIATIONS & SYMBOLS
S2-102	GENERAL NOTES
S2-103	GENERAL NOTES, SPECIAL INSPECTIONS & TESTS
S2-201	FOUNDATION PLAN
S2-202	ROOF FRAMING PLAN
S2-301	TYPICAL CONCRETE DETAILS
S2-311	CONCRETE DETAILS
S2-312	CONCRETE DETAILS
S2-401	TYPICAL WOOD DETAILS
S2-402	TYPICAL WOOD DETAILS
S2-403	TYPICAL WOOD DETAILS
S2-404	TYPICAL WOOD DETAILS
S2-421	ROOF FRAMING DETAILS
S2-422	ROOF FRAMING DETAILS

These plans are only to be used within City of Carpinteria jurisdiction. By using these standard plans ("ADU Plans") in accordance with the City of Carpinteria's Pre-Approved ADU Construction Plans Program, the User agrees to defend, indemnify, and hold harmless the City of Carpinteria and RRM from any and all claims, liabilities, suits, and demands on account of any injury, damage, or loss to persons or property, including injury or death, or economic losses, arising out of the use of these ADU Plans. The use of these ADU Plans does not eliminate or reduce the user's responsibility to verify any and all information herein.

ABBREVIATIONS

A & B	ABOVE AND BELOW
AB	ANCHOR BOLT
ABV	ABOVE
ACI	AMERICAN CONCRETE INSTITUTE
ADDL	ADDITIONAL
ADJ	ADJACENT
AESS	ARCHITECTURAL EXPOSED STRUCTURAL STEEL
AISC	AMERICAN INSTITUTE OF STEEL CONSTRUCTION
ALT	ALTERNATE
ALUM	ALUMINUM
ANCH	ANCHOR
ANSI	AMERICAN NATIONAL STANDARDS INSTITUTE
APA	ENGINEERED WOOD ASSOCIATION (FORMERLY THE AMERICAN PLYWOOD ASSOCIATION)
APPVD	APPROVED
APPROX	APPROXIMATE
ARCH	ARCHITECTURAL; ARCHITECT
AWPA	AMERICAN WOOD PRESERVERS ASSOCIATION
AWS	AMERICAN WELDING SOCIETY
AITC	AMERICAN INSTITUTE OF TIMBER CONSTRUCTION
ASTM	AMERICAN SOCIETY FOR TESTING MATERIALS
BLDG	BUILDING
BLK	BLOCK
BLKG	BLOCKING
BM	BEAM
BN	BOUNDARY NAIL
BOT OR B	BOTTOM
BRC	BRACE
BRG	BEARING
BTWN	BETWEEN
CANT	CANTILEVER
CAM OR C	CAMBER
CC	CENTER TO CENTER
CG	CENTER OF GRAVITY
CIP	CAST-IN-PLACE
CJ	CONSTRUCTION JOINT; CONTROL JOINT
CL	CENTER LINE
CLR	CLEARANCE; CLEAR
CMU	CONCRETE MASONRY UNIT
COL	COLUMN
COMP	COMPRESSION
CONC	CONCRETE
CONN	CONNECTION; CONNECT
CONSTR	CONSTRUCTION
CONT	CONTINUE; CONTINUOUS
CONTR	CONTRACTOR
CJP	COMPLETE JOINT PENETRATION WELD
CTR	CENTER
CTSK	COUNTERSINK; COUNTERSUNK
CU FT	CUBIC FOOT
d	PENNY (NAIL OR BAR DIA)
DBL	DOUBLE
DEPT	DEPARTMENT
DET	DETAIL
DF	DOUGLAS FIR/LARCH
DIA OR Ø	DIAMETER
DIAG	DIAGONAL
DIAPH	DIAPHRAGM
DIM	DIMENSION
DN	DOWN
DO	DO OVER
DWG	DRAWING
DWL	DOWEL
EA	EACH
EF	EACH FACE
EJ	EXPANSION JOINT
EL	ELEVATION
ELEC	ELECTRICAL
ELEV	ELEVATOR
EMBED	EMBEDMENT
EN	EDGE NAIL
ENGR	ENGINEER
EQ	EQUAL OR EQUIVALENT
EQUIP	EQUIPMENT
ES	EACH SIDE
EW	EACH WAY
EXIST or (E)	EXISTING
EXT	EXTERIOR
FDN	FOUNDATION
FIN	FINISH
FJ	FLOOR JOIST
FLG	FLANGE
FLR	FLOOR
FN	FIELD NAIL
FOC	FACE OF CONCRETE
FOM	FACE OF MASONARY
FOS	FACE OF STUD
FOW	FACE OF WALL
FRMG	FRAMING
FT	FOOT; FEET
FTA	FLOOR TIE ABOVE
FTG	FOOTING
GA	GAUGE
GALV	GALVANIZED
GB	GRADE BEAM
GLB	GLUED LAMINATED BEAM
GR	GRADE
GRND	GROUND
H or HORIZ	HORIZONTAL
HDR	HEADER
HGR	HANGER
HP	HIGH POINT
HSH	HORIZONTALLY SLOTTED HOLES
HT	HEIGHT
ID	INSIDE DIAMETER
IF	INSIDE FACE
I-JST	I-JOIST
IN	INCH
INCL	INCLUDE
INFO	INFORMATION
INSP	INSPECTION
INT	INTERIOR
JST	JOIST
JT	JOINT
K	KIPS
KS	KING STUD
KP	KING POST
KSI	KIPS PER SQUARE INCH
LB(S) OR #	POUND(S)
LF	LINEAL FOOT
LIN	LINEAL; LINEAR
LLH	LONG LEG HORIZONTAL
LLV	LONG LEG VERTICAL
LP	LOW POINT
LSH	LONG SLOTTED HOLES
LSL	LAMINATED STRAND LUMBER
LT WT	LIGHTWEIGHT
LVL	LEVEL OR LAMINATED VENEER LUMBER
MAS	MASONRY
MATL	MATERIAL
MAX	MAXIMUM
MB	MACHINE BOLT
MECH	MECHANICAL
MFR	MANUFACTURER
MIN	MINIMUM; MINUTE
MISC	MISCELLANEOUS
(N)	NEW
N	NORTH
NO or #	NUMBER
NTS	NOT TO SCALE
OC	ON CENTER
OD	OUTSIDE DIAMETER
OF	OUTSIDE FACE
OH	OPPOSITE HAND
OPNG	OPENING
OPP	OPPOSITE
ORIG	ORIGINAL
OSB	ORIENTED STRAND BOARD
PA	POST ABOVE
PARA OR //	PARALLEL
PC	PRECAST; PIECE
PERP	PERPENDICULAR
PI	PLYWOOD INDEX
℄ OR PL.	PLATE
PL	PROPERTY LINE
PLF	POINDS PER LINEAL FOOT
PLCS	PLACES
PLY	PLYWOOD
PROP	PROPERTY
PT	PRESSURE TREATED
PW	PLATE WASHER
PJP	PARTIAL JOINT PENETRATION WELD
PREFAB	PREFABRICATED
PSF	POUNDS PER SQUARE FOOT
PSI	POUNDS PER SQUARE INCH
PSL	PARALLEL STRAND LUMBER
PVMT	PAVEMENT
#	POUND; NUMBER
REF	REFERENCE
REINF	REINFORCE; REINFORCING
REQD	REQUIRED
RF	ROOF
RR	ROOF RAFTER
Ø	ROUND; DIAMETER
SCHED	SCHEDULE
SECT	SECTION
SEP	SEPARATION
SHT	SHEET
SHTG	SHEATHING
SIM	SIMILAR
SOG	SLAB ON GRADE
SN	SHEAR NAIL
SPCG	SPACING
SPECS	SPECIFICATIONS
SQ	SQUARE
SS	STAINLESS STEEL
SSL	SHORT SLOTTED HOLES
STD	STANDARD
STGR	STAGGER
STIFF	STIFFENERS
STIRR	STIRRUP
STL	STEEL
STRUCT	STRUCTURAL
SW	SHEAR WALL
SYM	SYMMETRICAL
TB	TIE BEAM
T & B	TOP AND BOTTOM
T & G	TONGUE & GROOVE
TO	TOP OF
TOC	TOP OF CURB; TOP OF CONCRETE
TOF	TOP OF FOOTING
TEMP	TEMPERATURE; TEMPORARY
THRU	THROUGH
THK	THICKNESS/THICK
THR	THREADED
TOP or T	TOP
TOS	TOP OF STEEL/TOP OF SLAB
TOW	TOP OF WALL
TS	TRIMMER STUD
TYP	TYPICAL
UNO	UNLESS NOTED OTHERWISE
UT	ULTRA-SONIC TEST
VERT	VERTICAL
VSH	VERTICAL SLOTTED HOLES
W/	WITH
W/O	WITHOUT
WO	WHERE OCCURS
WD	WOOD
WP	WORK POINT; WATERPROOF
WWF	WELDED WIRE FABRIC

STRUCTURAL STEEL SHAPES

W	W SHAPE
C	AMERICAN STD CHANNEL SHAPE
MC	MISC CHANNEL SHAPE
L	ANGLE SHAPE
WT, ST, MT	STRUCT TEE SHAPE
PIPE	STANDARD PIPE SHAPE
PIPE-X	EXTRA STRONG PIPE SHAPE
PIPE-XX	DBL EXTRA STRONG PIPE SHAPE
HSS	HOLLOW STRUCTURAL SECTION

CARPINTERIA ADU PROTOTYPES

SANTA BARBARA COUNTY, CA

SHEET INDEX, ABBREVIATIONS & SYMBOLS

DATE
05/09/2023

SHEET
S2-101

\\corp\rrm\on-site\2200\227401-CU21-Carpinteria-Downtown-Design-Overlay-SB2-Funded\Structural\CorDocs\Sheet-Files\Plan 2\227401-CU21 - S101.dwg S101, May 09, 2023 2:11pm, Alcopez

SAWN LUMBER

1. FRAMING LUMBER SHALL MEET THE FOLLOWING MINIMUM STANDARDS EXCEPT WHERE OTHERWISE NOTED:

SAWN LUMBER PROPERTIES				
USE	SIZE	SPECIES	GRADE	REFERENCE
MUDSILLS	2 X 4	D.F.	STANDARD OR BETTER PRESSURE TREATED	2022 CBC 2303.1.9
	2 X 6 AND LARGER	D.F.	NO. 2 OR BETTER PRESSURE TREATED	
	2 X	REDWOOD	FOUNDATION GRADE	
HORIZONTAL FRAMING LUMBER				
ROOF JOISTS AND RAFTERS	2 x	D.F.	NO. 2	WCLIB & WWPA
FLOOR JOISTS	2 X	D.F.	NO. 2	
HEADERS AND BEAMS	4 X	D.F.	NO. 2	
ANY OTHER HORIZONTAL	4 X 4 AND SMALLER	D.F.	NO. 2	
	6 X 6 AND LARGER	D.F.	NO. 1	
VERTICAL FRAMING LUMBER				
TOP PLATES	2 X	D.F.	NO. 2	WCLIB & WWPA
STUDS	2 X 4 & 3 X 4	D.F.	STUD	
	2 X 6 & 2 X 8	D.F.	NO. 2	
POSTS	4 X 4 & 4 X 6 POSTS	D.F.	NO. 2	
	6 X 6 & LARGER POSTS	D.F.	NO. 1	
ALL OTHER FRAMING LUMBER				
ALL OTHER FRAMING LUMBER, UNO	ALL SIZES	D.F.	STANDARD & BETTER	WCLIB & WWPA

2. FLOOR JOISTS SHALL BE GRADE STAMPED "S-DRY" WHICH INDICATES A MOISTURE CONTENT NOT EXCEEDING 19 PERCENT.

3. ALL SOLE PLATES AND TOP PLATES SHALL BE GRADE STAMPED "KD" WHICH INDICATES KILN DRIED WITH A MOISTURE CONTENT NOT EXCEEDING 15 PERCENT.

4. STUD WALLS SHOWN ON PLANS ARE NONBEARING PARTITIONS WALLS, BEARING WALLS OR SHEAR WALLS BELOW THE FRAMING LEVEL, UNLESS NOTED OTHERWISE. STUDS SHALL BE SIZE AND SPACING AS NOTED IN THE DRAWINGS, SEE PLANS AND ARCHITECTURAL DRAWINGS. UNLESS OTHERWISE NOTED.

5. MINIMUM FRAMING NAILING SHALL CONFORM TO CBC TABLE 2304.10.2. ALL NAILS SHALL BE COMMON WIRE NAILS. PREDRILL NAIL HOLES TO 70% OF NAIL SHANK DIAMETER WHERE NAILING TENDS TO SPILT WOOD.

6. UNLESS OTHERWISE NOTED, ALL WOOD SILL PLATES UNDER BEARING, EXTERIOR, OR SHEAR WALLS IN CONTACT WITH CONCRETE OR MASONRY SHALL BE BOLTED TO THE CONCRETE OR MASONRY WITH 5/8" Ø X 12" BOLTS W/ 0.229" X 3" X 3" PLATE WASHER (GALV) AT 4'-O"' O.C. BEGINNING AT 9" O.C. MAXIMUM FROM EACH END OF THE PLATES. THE BOLTS SHALL EXTEND A MINIMUM OF 7" INTO THE CONCRETE OR MASONRY. (POWDER DRIVEN PINS AT 1/3 OF THE BOLT SPACING OR 24" O.C. MAXIMUM MAY BE SUBSTITUTED FOR THE ANCHOR BOLTS AT INTERIOR NON-SHEAR WALLS ONLY).

7. ALL LUMBER IN CONTACT WITH CONCRETE SHALL BE PRESSURE TREATED LUMBER WITH AWPA TREATMENT C2 USING EITHER ALKALINE QUAT (ACQ TYPE B AND D), COPPER AZOLE (CBA-A, CA-B), OR SODIUM BORATES (SBX). ANCHOR BOLTS, FASTENERS, AND METAL FRAMING CONNECTORS IN CONTACT WITH PRESSURE TREATED LUMBER SHALL BE HOT-DIPPED GALVANIZED TO A RATING OF G-185 PER ASTM A653.

8. PROVIDE 2 STUDS UNDER ALL 4 X 10 AND LARGER BEAMS OR HEADERS AT SPANS 6 FEET OR LONGER, UNLESS OTHERWISE NOTED. WHERE POSTS OR MULTIPLE STUDS UNDER BEAMS OR HEADERS ARE CALLED FOR ON DRAWINGS THOSE POSTS OR MULTIPLE STUDS SHALL BE CARRIED TO THE FOUNDATION/PODIUM LEVEL.

9. PROVIDE THE FOLLOWING BLOCKING AS A MINIMUM, UNLESS SHOWN OTHERWISE:
   2" X FULL DEPTH SOLID BLOCKING BETWEEN JOISTS OVER SUPPORT.
   2" X FULL DEPTH SOLID BLOCKING BETWEEN JOISTS OVER AND BELOW PARTITION WALLS.

10. DOUBLE JOISTS UNDER PARTITIONS RUNNING PARALLEL TO JOISTS, UNLESS SUPPORTED BY A WALL BELOW OR SHOWN OTHERWISE. NAIL DOUBLED JOISTS WITH 16D AT 12" O.C., STAGGERED.

11. BRIDGING SHALL BE 2 X SOLID BLOCKS, INSTALLED AS FOLLOWS:
    ROOF JOISTS MORE THAN 10" DEPTH, 8'-O" O.C. MAXIMUM, NOT MORE THAN 8'-0' FROM SUPPORT.
    FLOOR JOISTS MORE THAN 10" DEPTH, 8'-O" O.C. MAXIMUM, NOT MORE THAN 8'-0' FROM SUPPORT.

12. JOIST HANGERS AND OTHER METAL FRAMING ACCESSORIES ARE REFERRED TO ON PLANS BY PARTICULAR TYPE AS MANUFACTURED BY SIMPSON STRONG-TIE COMPANY, STOCKTON, CALIFORNIA. ACCESSORIES OF OTHER MANUFACTURE WITH EQUIVALENT LOAD CARRYING CHARACTERISTICS MAY BE USED.

13. FIRE STOPPING, BACKING FOR INTERIOR FINISHES, NONBEARING WALLS, AND OTHER NON-STRUCTURAL FRAMING ARE NOT NECESSARILY SHOWN ON STRUCTURAL DRAWINGS.

HARDWARE AND CONNECTORS

GENERAL:
USE ALL SPECIFIED FASTENERS AS SPECIFIED ON PLANS. IF NOT INDICATED ON PLANS PROVIDE FASTENERS PER MFR'S APPROVED ICC-ESR REPORT OR PRODUCT LITERATURE

HOLDOWNS:
1. DO NOT OVER TIGHTEN NUTS ON TIE-DOWN ANCHOR RODS OR BOLTS. TIGHTEN ANCHOR ROD NUTS ONE-THIRD TO ONE HALF TURN BEYOND FINGER TIGHT
2. INSTALL ALL HOLDOWNS TIGHT TO END STUDS/POST, DO NOT USE FILLER BLOCKS. FOR MISALIGNED ANCHOR BOLTS, EXTEND THE ANCHOR ROD AT A 1:6 (HORIZ/VERT) USING A COUPLER WITH EQUIVALENT ANCHOR ROD AND INSTALL THE HOLDOWN HIGHER ON END STUD / POST
3. FOR HOLDOWNS THAT BOLT TO END POSTS, INSTALL THE HEAD OF THE BOLT TO THE BRACKET SIDE, AND ON THE SIDE OPPOSITE THE BRACKET, INSTALL A WASHER BETWEEN THE NUT AND THE STUD / POSTS

TIE DOWN & COLLECTOR STRAPS:
1. TIE DOWN AND COLLECTOR STRAPS SHALL BE INSTALLED STRAIGHT AND TRUE. DO NOT FOLD, BEND, KINK OR OTHERWISE ALTER CONNECTOR STRAPS
2. INSTALL TIE DOWN STRAPS DIRECT TO POST IN LIEU OF OVER SHEATHING. STRAPS MAY BE INSTALLED ON THE UNSHEATHED SIDE OF THE END STUDS / POSTS

CONCRETE

1. ALL CONCRETE CONSTRUCTION SHALL CONFORM WITH CHAPTER 19 OF THE CODE AND WITH THE PROVISIONS OF ACI 318-19.

2. CONCRETE MATERIALS SHALL BE IN ACCORDANCE WITH THE FOLLOWING STANDARDS:

MATERIAL	ASTM STANDARD
PORTLAND CEMENT (TYPE II)[A]	C150
CONCRETE AGGREGATES (HARDROCK)	C33
WATER[B]	C1602
COAL FLY ASH OR POZOLLAN (CLASS F)	C618
NATURAL OR MANUFACTURED SAND	C33
SLAG	C989

   A. FOR SOILS WITH HIGH CONCENTRATIONS OF SULFATES (EXPOSURES S2 OR S3 PER ACI 318-19 TABLE 19.3.2.1) PORTLAND CEMENT SHALL BE TYPE V. VERIFY WITH PROJECT GEOTECHNICAL REPORT.

   B. WATER SHOULD ONLY BE ADDED AT THE BATCH PLANT. IN NO CASE SHALL THE DESIGN WATER/ CEMENT RATIO BE EXCEEDED.

3. CONCRETE MIXES SHALL BE PROPORTIONED BASED ON SECTION 26.4.3 OF ACI 318-19, WHICH REFERENCES ACI 301-10 ARTICLE 4.2.3. MIX DESIGNS SHALL INCLUDE DOCUMENTATION OF MIX AVERAGE COMPRESSIVE STRENGTH THROUGH FIELD TEST DATA OR TRAIL MIXTURES IN ACCORDANCE WITH ACI 301-10 ARTICLE 4.2.3.4. SCHEDULE OF STRUCTURAL CONCRETE STRENGTHS AND LOCATIONS (UNO):

LOCATION IN STRUCTURE	MINIMUM STRENGTH (PSI)	DENSITY (PCF)	MAX SLUMP (IN±1)	MAX WATER/CEMENT RATIO	SLAG/ FLY ASH[A] (MAX)
CONCRETE FOUNDATIONS, GRADE BEAMS, TIE BEAMS	2,500	150	4	0.5	0.15
CONCRETE SLAB ON GRADE	2,500	150	4	0.45	0.15

   A. AS MEASURED BY CEMENTITIOUS WEIGHT

4. DEPOSITING AND CONVEYING OF CONCRETE SHALL CONFORM TO SECTION 26.5 OF ACI 318-19 AND PROJECT SPECIFICATIONS.

5. ALL CONCRETE SURFACES AGAINST WHICH NEW CONCRETE IS TO BE PLACED SHALL BE CLEANED AND ROUGHENED TO 1/4" AMPLITUDE.

6. ALL REINFORCING BARS, ANCHOR BOLTS AND OTHER CONCRETE INSERTS SHALL BE WELL SECURED IN POSITION PRIOR TO PLACING CONCRETE.

7. PROVIDE SLEEVES FOR PLUMBING AND ELECTRICAL OPENINGS IN CONCRETE BEFORE PLACING. DO NOT CUT ANY REINFORCING WHICH MAY CONFLICT. CORING IN CONCRETE IS NOT PERMITTED WITHOUT SEOR APPROVAL. NOTIFY THE SEOR IN ADVANCE OF CONDITIONS NOT SHOWN ON THE DRAWINGS. SEE THE DRAWINGS FOR ADDITIONAL RESTRICTIONS ON THE PLACEMENT OF OPENINGS IN SLABS AND WALLS.

8. PIPES EMBEDDED IN CONCRETE:
   A. CONCRETE
      a. PIPES LARGER THAN 1-1/2" DIAMETER SHALL NOTE BE EMBEDDED IN STRUCTURAL CONCRETE EXCEPT WHERE SPECIFICALLY APPROVED BY SEOR.
      b. NO CONDUITS SHALL BE PLACED IN CONCRETE FILL OVER METAL DECK.
      c. PIPES SHALL NOT DISPLACE OR INTERRUPT REINFORCING BARS.
      d. DO NOT STACK CONDUITS, SPACE EMBEDDED PIPES AND CONDUITS AT A MINIMUM OF 3 DIAMETERS CLEAR FROM OTHER EMBEDDED PIPES/CONDUITS AND REBAR.

REINFORCING STEEL

1. REINFORCING BARS SHALL CONFORM TO THE REQUIREMENTS OF CHAPTER 19 OF THE CODE AND WITH THE PROVISIONS OF ACI 318-19, ASTM A706, GRADE 60 UNO. ASTM A615 GR 60 STEEL MAY BE SUBSTITUTED FOR ASTM A706 GR60 STEEL PER ACI 318-19 SECTION 20.2.2.5 PROVIDED THE FOLLOWING CONDITIONS ARE MET:
   A. THE ACTUAL YIELD STRENGTH BASED ON MILL TESTS DOES NOT EXCEED THE SPECIFIED YIELD STRENGTH BY MORE THAN 18,000 PSI.
   B. THE RATIO OF THE ACTUAL ULTIMATE TENSILE STRESS TO THE ACTUAL YIELD STRENGTH IS NOT LESS THAN 1.25.
   C. WHERE REINFORCEMENT COMPLYING WITH ASTM A615 IS TO BE WELDED, CHEMICAL TESTS SHALL BE PERFORMED TO DETERMINE WELDABILITY IN ACCORDANCE WITH SECTION 26.6.4 OF ACI 318-19.

2. BARS SHALL BE CLEAN OF RUST, GREASE, OR OTHER MATERIALS LIKELY TO IMPAIR BOND. ALL REINFORCING BAR BENDS SHALL BE MADE COLD.

3. REINFORCING BAR LAP SPLICES SHALL BE MADE AS INDICATED ON THE DRAWINGS. LAP ALL HORIZONTAL BARS AT CORNERS AND INTERSECTIONS. STAGGER ALL SPLICES UNLESS NOTED OTHERWISE ON PLANS.
   A. MINIMUM LAP SPLICE LENGTH FOR REINFORCING STEEL BARS IN CONCRETE SHALL BE PER ACI 318-19 SECTION 25.5.2 AND THE REINFORCING SCHEDULE ON THE DRAWINGS.

5. REINFORCING STEEL SHALL BE ACCURATELY PLACED AND ADEQUATELY SUPPORTED BEFORE THE CONCRETE IS PLACED AND SHALL BE SECURED AGAINST DISPLACEMENT DURING CONSTRUCTION WITHIN PERMITTED TOLERANCES. ADEQUATE SUPPORTS ARE ALSO NECESSARY TO KEEP THE REINFORCING STEEL AT THE PROPER DISTANCE FROM THE FORMS. USE WIRE BAR SUPPORTS, PRECAST CONCRETE SUPPORTS, SPACERS, BOLSTERS, REINFORCEMENT OR OTHER MEANS OF SUPPORT PER THE "CRSI MANUAL OF STANDARD PRACTICE", LATEST EDITION.

6. ED ITEMS MAY BE CORRECTED PRIOR TO PLACEMENT OF OVERLYING GRIDS OR REINFORCING STEEL.

7. CONCRETE PROTECTION FOR REINFORCEMENT

THE FOLLOWING MINIMUM CONCRETE COVER SHALL BE PROVIDED FOR REINFORCEMENT IN CAST-IN-PLACE CONCRETE (NON-PRESTRESSED):	MINIMUM COVER, IN.
A. CONCRETE CAST AGAINST AND PERMANENTLY EXPOSED TO EARTH	3
B. CONCRETE EXPOSED TO EARTH OR WEATHER: NO.6 THROUGH NO. 18 BAR NO.5 BAR, W31 OR D31 WIRE & SMALLER	 2 1½"
C. CONCRETE NOT EXPOSED TO WEATHER OR IN CONTACT WITH GROUND: SLABS, WALLS, JOISTS: NO.14 AND NO.18 BARS NO.11 BAR & SMALLER BEAMS, COLUMNS: PRIMARY REINFORCEMENT TIES, STIRRUPS, SPIRALS	 1½" ¾" 1½"

WOOD (GENERAL)

1. PRESERVATIVE TREATMENT:

A. WOOD MEMBERS SHALL BE PRESERVATIVE TREATED IN ACCORDANCE WITH AITC 109-07, STANDARD FOR PRESERVATIVE TREATMENT, BASED ON THE SERVICE CONDITION PER THE USE CATEGORIES (UC#) SPECIFIED IN AWPA U1-06.
   a. UC1 - INTERIOR CONSTRUCTION, ABOVE GROUND, DRY - NO PRESERVATIVE TREATMENT REQUIRED
   b. UC2 - INTERIOR CONSTRUCTION, ABOVE GROUND, WET - PRESERVATIVE TREATMENT REQUIRED IF THE HUMIDITY OR MOISTURE CONDENSATION IS 20% OR GREATER.
   c. UC3 - EXTERIOR CONSTRUCTION ABOVE GROUND - PRESERVATIVE TREATMENT REQUIRED.

B. FOR ALL TREATED WOOD MEMBERS, ALL CUTS, HOLES AND INJURIES SUCH AS ABRASIONS OR HOLES FROM REMOVAL OF NAILS AND SPIKES WHICH MAY PENETRATE THE TREATED ZONE SHALL BE FIELD TREATED IN ACCORDANCE WITH AWPA M4-06. THE FOLLOWING FIELD TREATMENTS SHALL BE USED:
   a. BORED HOLES: HOLES FOR CONNECTORS OR BOLTS MAY BE TREATED BY PUMPING COAL TAR ROOFING CEMENT MEETING ASTM D5643 INTO HOLES USING A GREASE GUN OR SIMILAR DEVICE
   b. EXTERIOR: COPPER NAPHTHENATE
   c. INTERIOR: INORGANIC BORON PRESERVATIVES LIMITED TO USE IN APPLICATIONS NOT IN CONTACT WITH GROUND AND CONTINUOUSLY PROTECTED FROM LIQUID WATER

FOUNDATION

1. GEOTECHNICAL INFORMATION AND FOUNDATION DESIGN IS BASED ON THE FOLLOWING:
   A. DESIGN LATERAL SOIL LOADS ARE IN ACCORDANCE WITH 2022 CBC TABLE 1610.1
   B. ALLOWABLE FOUNDATION BEARING AND LATERAL PRESSURES ARE IN ACCORDANCE WITH 2022 CBC TABLE 1806.2

2. SPREAD OR CONTINUOUS FOOTINGS:

ELEMENT	ALLOWABLE BEARING CAPACITY (PSF)[A]	ALLOWABLE LATERAL RESISTANCE[B]	
		PASSIVE RESISTANCE (PSF/FT BELOW GRADE)[E]	COHESION (PSF)
SHALLOW FOUNDATION	1,500	100	130

   NOTES:
   A. THE ALLOWABLE CAPACITY MAY BE INCREASED BY ONE-THIRD WHEN CONSIDERING LOADS OF SHORT DURATION SUCH AS WIND OR SEISMIC FORCES.
   B. THE ALLOWABLE LATERAL RESISTANCE CAN BE TAKEN AS THE SUM OF THE FRICTIONAL RESISTANCE AND PASSIVE RESISTANCE .
   C. THE UPPER 0 FOOT OF SOIL NOT PROTECTED BY PAVEMENT SHALL BE NEGLECTED WHEN CALCULATING PASSIVE RESISTANCE.
   D. COMPACTED FILL SHOULD BE PREPARED AS FOLLOWS: A MIN OF 12" OF COMPACTED FILL SHALL BE PROVIDED, COMPACTED TO A MIN OF 90 PERCENT MODIFIED PROCTOR IN ACCORDANCE WITH ASTM D 1557 (2022 CBC 1804.6)

4. WHERE NOT SHOWN ON THE DRAWINGS, CONTRACTOR TO PROVIDE FOR DESIGN AND INSTALLATION OF ALL CRIBBING, SHEATHING AND SHORING REQUIRED AND SHALL BE SOLELY RESPONSIBLE FOR ALL EXCAVATION PROCEDURES INCLUDING LAGGING, SHORING, AND PROTECTION OF ADJACENT PROPERTY, STRUCTURES, STREETS, AND UTILITIES IN ACCORDANCE WITH ALL NATIONAL, STATE AND LOCAL SAFETY ORDINANCES.

5. CONTRACTOR TO PROVIDE FOR DE-WATERING OF EXCAVATIONS FROM SURFACE WATER, GROUND WATER AND/OR SEEPAGE.

6. EXCAVATION FOR FOOTINGS SHALL BE APPROVED BY THE INSPECTOR OR GEOTECHNICAL ENGINEER PRIOR TO PLACING CONCRETE AND REINFORCING.

7. ALL EXCAVATIONS SHALL BE PROPERLY BACKFILLED. DO NOT PLACE BACKFILL BEHIND RETAINING WALLS BEFORE CONCRETE OR GROUT HAS ATTAINED FULL DESIGN STRENGTH. CONTRACTOR SHALL PROVIDE FOR DESIGN, PERMITS AND INSTALLATION OF SUCH BRACING.

8. EXCAVATIONS SHALL BE CUT SQUARE AND SMOOTH, WITH LEVEL BOTTOMS.

9. FOOTING BACKFILL AND UTILITY TRENCH BACKFILL WITHIN BUILDING AREA SHALL BE MECHANICALLY COMPACTED IN LAYERS IN ACCORDANCE WITH THE GEOTECHNICAL INVESTIGATION REPORT AND APPROVED BY THE GEOTECHNICAL ENGINEER. FLOODING WILL NOT BE PERMITTED. ALL FILLS USED TO SUPPORT FOUNDATIONS SHALL BE INSPECTED BY THE GEOTECHNICAL ENGINEER REPRESENTATIVE PER SECTION 1705.6 OF THE CODE.

10. ALL ABANDONED FOOTINGS, UTILITIES, ETC. SHALL BE REMOVED. NEW FOOTINGS MUST EXTEND INTO UNDISTURBED SOILS.

EXISTING CONDITIONS

1. ALL INFORMATION SHOWN ON THE PLANS RELATIVE TO EXISTING CONDITIONS IS GIVEN AS THE BEST PRESENT KNOWLEDGE FROM PLANS SUPPLIED BY THE OWNER, BUT WITHOUT GUARANTEE OF ACCURACY.

2. WHERE ACTUAL CONDITIONS ARE NOT IN ACCORDANCE WITH THE INFORMATION PRESENTED, THE ARCHITECT AND/OR STRUCTURAL ENGINEER SHALL BE NOTIFIED IMMEDIATELY. NO MODIFICATIONS OF THE PLANS FOR NEW CONSTRUCTION SHALL BE MADE WITHOUT THE WRITTEN APPROVAL OF THE ARCHITECT.

EXISTING UNDERGROUND UTILITIES

1. THE ARCHITECT AND ENGINEERS ARE NOT RESPONSIBLE FOR THE LOCATIONS OF EXISTING UNDERGROUND UTILITIES WHETHER OR NOT SHOWN ON THE DRAWINGS. DRAWINGS, IF ANY, IS APPROXIMATE. THE CONTRACTOR SHALL EXERCISE EXTREME CAUTION IN EXCAVATING AND TRENCHING ON THE SITE. THE CONTRACTOR SHALL IMMEDIATELY NOTIFY THE ARCHITECT AND/OR STRUCTURAL ENGINEER SHOULD ANY SUCH UNIDENTIFIED CONDITIONS BE DISCOVERED.

2. THE CONTRACTOR SHALL BE RESPONSIBLE FOR ANY DAMAGES WHICH MAY RESULT FROM HIS FAILURE TO EXACTLY LOCATE AND PRESERVE ALL EXISTING UNDERGROUND UTILITIES.

3. AN UNDERGROUND SERVICE ALERT INQUIRY IDENTIFICATION NUMBER MUST BE OBTAINED AT LEAST TWO WORKING DAYS BEFORE STARTING WORK WITH THIS PERMIT.
   A. FOR PROJECTS IN SOUTHERN CALIFORNIA TELEPHONE NO. 1-800-422-4133.
   B. FOR PROJECTS IN NORTHERN CALIFORNIA TELEPHONE NO. 1-800-227-2600.

DEMOLITION

1. ALL DEMOLITION SHALL BE CARRIED ON IN SUCH A WAY AS NOT TO DAMAGE EXISTING ELEMENTS, WHICH ARE TO REMAIN IN THE FINISHED STRUCTURE.

2. ALL ELEMENTS OF THE STRUCTURE, WHICH ARE TO REMAIN, AND WHICH ARE DAMAGED DURING DEMOLITION WORK SHALL BE REPLACED AT NO ADDITIONAL COST. EXISTING ELEMENTS SHALL BE PROTECTED TO THE FULLEST EXTENT POSSIBLE, IN ORDER TO MITIGATE DAMAGE.

3. CONTRACTOR IS REPONSIBLE FOR REMOVAL AND REPLACEMENT OF ALL EXISTING ELEMENTS THAT ARE NECESSARY FOR THE INSTALLATION OF ALL NEW WORK.

4. WHERE EXISTING PARTITION WALLS ARE TO BE DEMOLISHED, CONTRACTOR SHALL VERIFY WALLS ARE NON-BEARING PRIOR TO DEMOLITION. IF WALLS ARE FOUND TO BE BEARING, CONTRACTOR SHALL NOTIFY ARCHITECT IMMEDIATELY

DESIGN INFORMATION

1. FLOOR LIVE LOADS: (2022 CBC SECTION 1603.1.1)

FLOOR LIVE LOADS			
OCCUPANCY OR USE	UNIFORM (PSF)	CONC. (LBS)	REFERENCE
RESIDENTIAL ONE- AND TWO- FAMILY DWELLINGS UNINHABITABLE ATTICS WITHOUT STORAGE UNINHABITABLE ATTICS WITH STORAGE HABITABLE ATTICS AND SLEEPING AREAS ALL OTHER AREAS	 10 20 30 40	—	2022 CBC TABLE 1607.1

2. ROOF LIVE LOADS (2022 CBC SECTION 1603.1.2)

ROOF LIVE LOADS			
OCCUPANCY OR USE	UNIFORM (PSF)	CONC. (LBS)	REFERENCE
ROOF ORDINARY FLAT, PITCHED AND CURVED ROOFS (THAT ARE NOT OCCUPIABLE)	20	—	2022 CBC TABLE 1607.1

3. ROOF SNOW LOADS (2022 CBC SECTION 1603.1.3):

SNOW DESIGN DATA		
PARAMETER	VALUE	REFERENCE
GROUND SNOW LOAD	Pg = 0 PSF	ASCE 7-16 7.2

4. WIND DESIGN DATA (2022 CBC SECTION 1603.1.4) :

WIND DESIGN DATA		
PARAMETER	VALUE	REFERENCE
ULTIMATE DESIGN WIND SPEED (3-SEC GUST)	V_{ULT} = 92 MPH	2022 CBC FIG. 1609.3
NOMINAL DESIGN WIND SPEED (3-SEC GUST)	V_{ASD} = 72 MPH	2022 CBC 1609.3.1
EXPOSURE CATEGORY	C	2022 CBC 1609.4.3
INTERNAL PRESSURE COEFFICIENT:	GCpi = ± 0.18	ASCE 7-16 TABLE 26.13-1

COMPONENTS & CLADDING WIND PRESSURES (PSF)				
LOCATION		COMPONENT TRIBUTARY AREA (SQ FT)		
		10	100	500
ROOF	ZONE 1	-26.3	-20.0	-16.0
	ZONE 2e	-26.3	-20.0	-16.0
	ZONE 2n	-41.9	-24.7	-21.6
	ZONE 2r	-41.9	-24.7	-21.6
	ZONE 3e	-41.9	-24.7	-21.6
	ZONE 3r	-45.8	-31.0	-31.0
	ALL ZONES	16.0	16.0	16.0
OVERHANG	ZONE 1	-34.1	-32.5	-31.0
	ZONE 2e	-34.1	-32.5	-31.0
	ZONE 2n	-49.7	-39.6	-37.2
	ZONE 2r	-49.7	-39.6	-37.2
	ZONE 3e	-59.1	-40.3	-40.3
	ZONE 3r	-59.1	-40.3	-40.3
WALL	ZONE 4	-20.0	-17.4	-16.0
	ZONE 5	-24.7	-19.2	-16.0
	POSITIVE	18.4	16.0	16.0

5. EARTHQUAKE DESIGN DATA (2022 CBC SECTION 1603.1.5):

SITE AND OCCUPANCY PARAMETERS		
PARAMETER	VALUE	REFERENCE
RISK CATEGORY	II	2022 CBC TABLE 1604.5
SEISMIC IMPORTANCE FACTOR	I = 1.0	ASCE 7-16 TABLE 1.5-2
MAPPED SPECTRAL RESPONSE ACCELERATIONS:	S_S = 2.375 g	2022 CBC 1613.2.1
	S_1 = 0.836 g	
SITE CLASS	D (DF)	2022 CBC 1613.2.2
SPECTRAL RESPONSE COEFFICIENTS:	S_{DS} = 1.9 g	2022 CBC 1613.2.4
	S_{D1} = 0.947 g	

BUILDING PARAMETERS		
PARAMETER	VALUE	REFERENCE
SEISMIC DESIGN CATEGORY	SDC = D	2022 CBC 1613.2.5
BASIC SEISMIC FORCE RESISTING SYSTEM	LIGHT FRAME (WOOD) WALLS SHEATHED WITH WOOD STRUCTURAL PANELS RATED FOR SHEAR RESISTANCE	ASCE 7-16 TABLE 12.2-1
RESPONSE MODIFICATION FACTOR	R = 6½	
SYSTEM OVERSTRENGTH FACTOR	Ωo = 3	
DEFLECTION AMPLIFICATION FACTOR	Cd = 4	
DESIGN BASE SHEAR	V = 6.1 k	ASCE 7-16 12.8.1
SEISMIC RESPONSE COEFFICIENTS	Cs = 0.292	ASCE 7-16 12.8.1.1
ANALYSIS PROCEDURE USED	EQUIVALENT LATERAL FORCE PROCEDURE	ASCE 7-16 12.8

6. GEOTECHNICAL INFORMATION (2022 CBC SECTION 1603.1.6):
   REFER TO FOUNDATION GENERAL NOTES

GENERAL

1. ALL WORK SHALL CONFORM TO THE MINIMUM STANDARDS OF THE FOLLOWING CODES AND STANDARDS:
   A. 2022 CALIFORNIA BUILDING CODE, PART 2, VOLUME 2 OF 2, AND TITLE 24 C.C.R. 2022 EDITION AND LATEST REVISIONS (INCLUDING SUPPLEMENTS AND ERRATA) HEREIN REFERRED TO AS "THE CODE".
   B. ANY OTHER REGULATING AGENCIES WHICH HAVE AUTHORITY OVER ANY PORTION OF THE WORK, INCLUDING THE STATE OF CALIFORNIA DIVISION OF OCCUPATIONAL SAFETY AND HEALTH (CAL/OSHA).
   C. CODES & STANDARDS REFERENCED IN THE CODE OR LISTED IN THESE NOTES AND SPECIFICATIONS.

2. ALL DRAWINGS ARE CONSIDERED TO BE A PART OF THE CONTRACT DOCUMENTS. THE CONTRACTOR SHALL BE RESPONSIBLE FOR THE REVIEW AND COORDINATION OF ALL DRAWINGS AND SPECIFICATIONS PRIOR TO THE START OF CONSTRUCTION. ANY DISCREPANCIES THAT OCCUR SHALL BE BROUGHT TO THE ATTENTION OF THE ARCHITECT PRIOR TO START OF CONSTRUCTION SO THAT A CLARIFICATION CAN BE ISSUED. ANY WORK PERFORMED IN CONFLICT WITH THE CONTRACT DOCUMENTS OR ANY CODE REQUIREMENTS SHALL BE CORRECTED BY THE CONTRACTOR AT THEIR OWN EXPENSE AND AT NO EXPENSE TO THE OWNER OR ARCHITECT.

3. NOTES AND DETAILS ON DRAWINGS SHALL TAKE PRECEDENCE OVER GENERAL NOTES AND TYPICAL DETAILS. WHERE NO DETAILS ARE GIVEN, CONSTRUCTION SHALL BE AS SHOWN FOR SIMILAR WORK.

4. THE CONTRACTOR SHALL VERIFY ALL DIMENSIONS PRIOR TO STARTING CONSTRUCTION. THE ARCHITECT SHALL BE NOTIFIED OF ANY DISCREPANCIES OR INCONSISTENCIES. IN NO INSTANCE SHALL DIMENSIONS BE SCALED FROM THE DRAWINGS.

5. SEE ARCHITECTURAL DRAWINGS FOR THE FOLLOWING:
   A. SIZE AND LOCATION OF ALL DOOR AND WINDOW OPENINGS, EXCEPT AS NOTED
   B. SIZE AND LOCATION OF ALL INTERIOR AND EXTERIOR NON-BEARING PARTITIONS UNLESS NOTED AND/OR DETAILED ON THE STRUCTURAL DRAWINGS
   C. SIZE AND LOCATION OF ALL CONCRETE CURBS, EQUIPMENT PADS, PITS, FLOOR DRAINS, SLOPES, DEPRESSED AREAS, CHANGE IN LEVEL, CHAMFERS, GROOVES, INSERTS, ETC
   D. SIZE AND LOCATION OF ALL FLOOR AND ROOF OPENINGS EXCEPT AS SHOWN
   E. FLOOR AND ROOF FINISHES
   F. MISCELLANEOUS DRAINAGE AND WATERPROOFING
   G. ALL FIREPROOFING REQUIREMENTS INCLUDING FIREPROOFING OF STRUCTURAL STEEL
   H. DIMENSIONS NOT SHOWN ON STRUCTURAL DRAWINGS

6. SEE MECHANICAL, PLUMBING AND ELECTRICAL DRAWINGS FOR THE FOLLOWING:
   A. PIPE RUNS, SLEEVES, HANGERS, TRENCHES, WALL AND SLAB OPENINGS, ETC., EXCEPT AS SHOWN OR NOTED.
   B. ELECTRICAL CONDUIT RUNS, BOXES, OUTLETS IN WALLS AND SLABS.
   C. CONCRETE INSERTS FOR ELECTRICAL, MECHANICAL OR PLUMBING FIXTURES.
   D. SIZE AND LOCATION OF MACHINE OR EQUIPMENT BASES, ANCHOR BOLTS FOR MOTOR MOUNTS.

7. SEE CIVIL DRAWINGS FOR THE FOLLOWING:
   A. HEIGHT AND/OR ELEVATION OF:
      a. FINISHED SURFACE
      b. TOP OF WALL
      c. TOP OF GRADE
      d. FINISHED GRADE
      e. SLOPE
   B. SITE CONCRETE WALKWAYS, CURBS & PAVING

8. THE CONTRACT STRUCTURAL DRAWINGS AND SPECIFICATIONS REPRESENT THE FINISHED STRUCTURE. THEY DO NOT INDICATE THE METHOD OF CONSTRUCTION. THE CONTRACTOR SHALL PROVIDE ALL MEASURES NECESSARY TO PROTECT THE STRUCTURE DURING CONSTRUCTION. SUCH MEASURES SHALL INCLUDE, BUT NOT BE LIMITED TO, BRACING, SHORING FOR LOADS DUE TO CONSTRUCTION EQUIPMENT ETC. THE CONTRACTOR IS RESPONSIBLE FOR PROVISION OF TEMPORARY SHORING AND OTHER CONSTRUCTION AIDS, INCLUDING ALL ENGINEERING OF SUCH SYSTEMS, FOR TEMPORARY SUPPORT OF NEW AND/OR EXISTING STRUCTURAL ELEMENTS AS REQUIRED FOR ERECTION AND OTHER CONTRACTOR'S MEANS AND METHODS OF CONSTRUCTION (UNO). OBSERVATION VISITS TO THE SITE BY THE STRUCTURAL ENGINEER SHALL NOT INCLUDE INSPECTION OF THE ABOVE ITEMS OR CONCERN CONSTRUCTION MEANS AND METHODS OR CONSTRUCTION SAFETY.

9. BACKFILL SHALL NOT BE PLACED BEHIND EXTERIOR AND INTERIOR RETAINING WALLS UNTIL THE CONCRETE / CMU HAS ACHIEVED FULL DESIGN STRENGTH. FOR BRACED WALLS SUPPORTED BY STRUCTURAL DIAPHRAGMS. BACKFILL SHALL NOT BE PLACED BEHIND THE WALL UNTIL THE DIAPHRAGM HAS BEEN INSTALLED , AND FOR CONCRETE DIAPHRAGMS, HAS ACHIEVED FULL DESIGN STRENGTH.

10. THE CONTRACT STRUCTURAL DRAWINGS SHOW THE BUILDING IN ITS FINAL INTENDED POSITION. CONTRACTOR SHALL MAKE PROVISIONS IN THE LAYOUT OF THE BUILDING TO TAKE INTO ACCOUNTS SHRINKAGE, CREEP, SHORTENING, ETC..

11. OPENINGS, POCKETS, ETC., LARGER THAN 6" SHALL NOT BE PLACED IN CONCRETE SLABS, DECKS, WALLS, UNLESS SPECIALLY DETAILED ON THE STRUCTURAL DRAWINGS. NOTIFY THE STRUCTURAL ENGINEER WHEN DRAWINGS BY OTHERS SHOW OPENINGS, POCKETS, ETC., LARGER THAN 6" NOT SHOWN ON THE STRUCTURAL DRAWINGS, BUT WHICH ARE LOCATED IN STRUCTURAL MEMBERS.

12. ASTM SPECIFICATIONS ON THE DRAWINGS SHALL BE THE VERSION REFERENCED IN CHAPTER 35 OF THE CODE OR AS REFERENCED IN THE APPLICABLE DESIGN STANDARD.

13. CONTRACTOR SHALL INVESTIGATE SITE DURING CLEARING AND EARTHWORK OPERATIONS FOR FILLED EXCAVATIONS OR BURIED STRUCTURES, SUCH AS CESSPOOLS, CISTERNS, FOUNDATIONS, ETC. IF ANY SUCH STRUCTURES ARE FOUND, THE STRUCTURAL ENGINEER AND GEOTECHNICAL ENGINEER SHALL BE NOTIFIED IMMEDIATELY.

14. CONSTRUCTION MATERIAL SHALL BE SPREAD OUT IF PLACED ON FRAMED ROOF OR FLOOR. LOAD SHALL NOT EXCEED THE DESIGN LIVE LOAD PER SQUARE FOOT. THE CONTRACTOR TO DESIGN AND PROVIDE ADEQUATE SHORING AND/OR BRACING WHERE STRUCTURE HAS NOT ATTAINED DESIGN STRENGTH.

15. CONTRACTOR SHALL COORDINATE SHORING WITH DRAWINGS OF RECORD TO INSURE PROVISIONS FOR POCKETS, BLOCKOUTS, OFFSETS, STEPPED FOOTINGS AND ANY OTHER ITEMS AFFECTED BY THE SHORING

16. AN UNDERGROUND SERVICE ALERT INQUIRY IDENTIFICATION NUMBER MUST BE OBTAINED AT LEAST TWO WORKING DAYS BEFORE STARTING WORK WITH THIS PERMIT.
    A. FOR PROJECTS IN SOUTHERN CALIFORNIA TELEPHONE NO. 1-800-422-4133.
    B. FOR PROJECTS IN NORTHERN CALIFORNIA TELEPHONE NO. 1-800-227-2600.

17. EDGE OF SLAB DIMENSIONS TO BE COORDINATED AND VERIFIED BY THE GENERAL CONTRACTOR PRIOR TO FABRICATION.

DIMENSIONS

1. DIMENSIONS SHALL BE DEFINED TO INCLUDE BOTH HORIZONTAL DIMENSIONS AND VERTICAL DIMENSIONS (ELEVATIONS).
2. WRITTEN DIMENSIONS SHALL TAKE PRECEDENCE OVER SCALED DRAWINGS.
3. SEE ARCHITECTURAL DRAWINGS FOR DIMENSION NOT NOTED ON STRUCTURAL DRAWINGS.
4. SEE ARCHITECTURAL AND/OR CIVIL DRAWINGS FOR FINISH FLOOR ELEVATIONS.
5. SEE ARCHITECTURAL DRAWINGS FOR ALL TOP OF SHEATHING AND/OR ROOF ELEVATIONS.
6. THE CONTRACTOR SHALL REVIEW AND VERIFY ALL DIMENSIONS PRIOR TO STARTING CONSTRUCTION. THE ARCHITECT SHALL BE NOTIFIED IMMEDIATELY OF ANY DISCREPANCIES OR INCONSISTENCIES.

These plans are only to be used within City of Carpinteria jurisdiction. By using these standard plans ("ADU Plans") in accordance with the City of Carpinteria's Pre-Approved ADU Construction Plans Program, the User agrees to defend, indemnify, and hold harmless the City of Carpinteria and RRM from any and all claims, liabilities, suits, and demands on account of any injury, damage, or loss to persons or property, including injury or death, or economic losses, arising out of the use of these ADU Plans. The use of these ADU Plans does not eliminate or reduce the user's responsibility to verify any and all information herein.

CARPINTERIA ADU PROTOTYPES
SANTA BARBARA COUNTY, CA
GENERAL NOTES

DATE
05/09/2023

SHEET
S2-102

\\corp\rrm\on-site\2200\2277-01-CU21-Carpinteria-Downtown-Design-Overlay-SB2-Funded\Structural\ConDocs\Sheet-Files\2277-01-CU21 - S102.dwg, PLAN 2 - S102, May 09, 2023 2:11pm, ALopez

REQUIRED VERIFICATION AND INSPECTIONS

WOOD
CODE CHAPTER 17 AND REFERENCED 2018 NDS AND AWC SDPWS-2021

SPECIAL INSPECTION OR TEST	CONTINUOUS	PERIODIC	CBC REFERENCE
3. WOOD LATERAL FORCE-RESISTING SYSTEM WITH FASTENER SPACING OF THE SHEATHING LESS THAN OR EQUAL TO 4" OC. - WOOD SHEAR WALLS - WOOD DIPHRAGMS - DRAG STRUTS - SHEAR PANELS - HOLD-DOWNS	—	X	1705.13.2
4. WOOD LATERAL FORCE-RESISTING SYSTEM WITH FASTENER SPACING OF THE SHEATHING GREATER THAN 4" OC (NOT REQUIRED) - WOOD SHEAR WALLS - WOOD DIAPHRAGMS - DRAG STRUTS - SHEAR PANELS - HOLD-DOWNS	—	—	1705.13.2

SOILS
CODE TABLE 1705.6

SPECIAL INSPECTION OR TEST	CONTINUOUS	PERIODIC
1. VERIFY MATERIALS BELOW SHALLOW FOUNDATIONS ARE ADEQUATE TO ACHIEVE THE DESIGN BEARING CAPACITY	—	X
2. VERIFY EXCAVATIONS ARE EXTENDED TO PROPER DEPTH AND HAVE REACHED PROPER MATERIAL.	—	X
3. PERFORM CLASSIFICATION AND TESTING OF COMPACTED FILL MATERIALS	—	X
4. VERIFY USE OF PROPER MATERIALS, DENSITIES, AND LIFT THICKNESSES DURING PLACEMENT AND COMPACTION OF COMPACTED FILL.	X	—
5. PRIOR TO PLACEMENT OF COMPACTED FILL, INSPECT SUBGRADE AND VERIFY THAT SITE HAS BEEN PREPARED PROPERLY.	—	X

CONCRETE CONSTRUCTION
CODE TABLE 1705.3

SPECIAL INSPECTION OR TEST	CONTINUOUS	PERIODIC	REFERENCED STANDARD	CBC REFERENCE
3. INSPECT ANCHORS CAST IN CONCRETE	—	X	ACI 318: 26.7	—
4. INSPECT ANCHORS POST-INSTALLED IN HARDENED CONCRETE MEMBERS [b] (a) ADHESIVE ANCHORS INSTALLED IN HORIZONTALLY OR UPWARDLY INCLINED ORIENTATIONS TO RESIST SUSTAINED TENSION LOADS (b) MECHANICAL ANCHORS AND ADHESIVE ANCHORS NOT DEFINED IN 4.a.	X 	 X	ACI 318: 26.7.1 ACI 318: 26.7.1	— —

STATEMENT OF SPECIAL INSPECTIONS

1. THIS STATEMENT OF SPECIAL INSPECTIONS HAS BEEN PREPARED PURSUANT TO SECTION 1704.3 OF THE CODE . THIS SECTION DETAILS BOTH REQUIRED SPECIAL INSPECTIONS AND TESTS INCLUDING TESTING PER SECTION 1705 OF THE CODE. THE FOLLOWING SHALL BE OBSERVED DURING THEIR IMPLEMENTATION:

   A. GENERAL:
      a. STRUCTURAL VERIFICATIONS, INSPECTIONS AND TESTS SHALL BE PERFORMED IN ACCORDANCE WITH CHAPTER 17 OF THE CODE AND/OR THE APPLICABLE REFERENCE STANDARD.

   B. OWNER REQUIREMENTS:
      a. THE OWNER OR OWNER'S AGENT SHALL EMPLOY ONE OR MORE APPROVED AGENCIES TO PERFORM INSPECTIONS DURING CONSTRUCTION ON THE TYPES OF WORK LISTED IN SECTION 1705 OF THE CODE AND IN THIS STATEMENT OF INSPECTIONS.

   C. SPECIAL INSPECTOR QUALIFICATIONS:
      a. THE SPECIAL INSPECTIONS SHALL PROVIDE WRITTEN DOCUMENTATION TO THE BUILDING OFFICIAL DEMONSTRATING HIS OR HER COMPETENCE AND RELEVANT EXPERIENCE OR TRAINING. THE EXPERIENCE OR TRAINING SHALL BE CONSIDERED RELEVANT WHEN THE DOCUMENTED EXPERIENCE OR TRAINING IS RELATED IN COMPLEXITY TO THE SAME TYPE OF SPECIAL INSPECTION ACTIVITIES FOR PROJECTS OF SIMILAR COMPLEXITY AND MATERIAL QUANTITIES.

   D. CONTRACTOR REQUIREMENTS:
      a. SPECIAL INSPECTION IS IN ADDITION TO THE CONTRACTOR'S QUALITY CONTROL INSPECTIONS AND TESTING. THE CONTRACTOR'S QUALITY CONTROL INSPECTIONS AND TESTING SHALL OCCUR PRIOR TO SPECIAL INPECTION AND REPORTS SHALL BE AVAILABLE TO THE SPECIAL INSPECTOR.
      b. THE CONTRACTOR SHALL ENSURE THAT THE WORK FOR WHICH SPECIAL INSPECTION IS REQUIRED REMAINS ACCESSIBLE AND EXPOSED FOR SPECIAL INSPECTION PURPOSES UNTIL COMPLETION OF THE REQUIRED SPECIAL INSPECTION.
      c. ANY CONTRACTOR RESPONSIBLE FOR THE CONSTRUCTION OF THE MAIN WIND OR SEISMIC FORCE RESISTING SYSTEM SHALL SUBMIT A WRITTEN STATEMENT OF RESPONSIBILITY TO THE BUILDING OFFICIAL AND OWNER PRIOR TO COMMENCEMENT OF WORK ON THE SYSTEM OR COMPONENT. THE STATEMENT OF RESPONSBILITY SHALL CONTAIN ACKNOWLEDGEMENT OF AWARENESS OF THE SPECIAL INSPECTION REQUIREMENTS CONTAINED IN THE STATEMENT OF SPECIAL INSPECTIONS.

   E. SPECIAL INSPECTOR REPORT REQUIREMENTS:
      a. THE SPECIAL INSPECTOR SHALL KEEP RECORD OF INSPECTIONS
      b. THE SPECIAL INPSECTOR SHALL FURNISH INSPECTION REPORTS TO THE BUILDING OFFICIAL AND TO THE ARCHITECT AND STRUCTURAL ENGINEER OF RECORD.
      c. REPORTS SHALL INDICATE THAT WORK INSPECTED WAS OR WAS NOT COMPLETED IN CONFORMANCE TO APPROVED CONSTRUCTION DOCUMENTS.
      d. DISCREPANCIES SHALL BE BROUGHT TO THE IMMEDIATE ATTENTION OF THE CONTRACTOR FOR CORRECTION.
      e. IF NOT CORRECTED DISCREPANCIES SHALL BE BROUGHT TO THE ATTENTION OF THE BUILDING OFFICIAL AND THE ARCHITECT AND STRUCTURAL ENGINEER OF RECORD PRIOR TO THE COMPLETION OF THAT PHASE OF WORK.
      f. A FINAL REPORT DOCUMENTING SPECIAL INSPECTIONS AND CORRECTION OF ANY DISCREPANCIES NOTED SHALL BE SUBMITTED TO THE BUILDING OFFICIAL.

SHOP FABRICATION

1. SHOP FABRICATION REQUIRES SPECIAL INSPECTION IN ACCORDANCE WITH CODE SECTION 1704.2.5. EXCEPTION: SHOP SPECIAL INSPECTIONS ARE NOT REQUIRED WHEN WORK IS DONE ON THE PREMISES OF FABRICATOR REGISTERED AND APPROVED TO PERFORM SUCH WORK IN ACCORDANCE WITH CODE SECTION 1704.2.5.1. THE FOLLOWING ACCREDITATIONS MEET THE REQUIREMENTS OF THIS EXCEPTION:
   A. STEEL BUILDINGS (OR STEEL ELEMENTS IN OTHER BUILDINGS)
      a. FOR GENERAL STEEL BUILDINGS OR ELEMENTS THE FABRICATOR SHALL BE AN AISC CERTIFIED FABRICATOR IN ACCORDANCE WITH THE AISC CERTIFICATION PROGRAM FOR STRUCTURAL STEEL FABRICATORS (AISC 201-06).
      b. OTHER ACCREDITATION DEEMED ACCEPTABLE BY THE AUTHORITY HAVING JURISDICTION.
      c. IF FABRICATION IS PERFORMED BY AN APPROVED FABRICATOR A CERTIFICATE OF COMPLIANCE MUST BE PROVIDED TO THE BUILDING INSPECTOR THAT THE MATERIALS SUPPLIED AND WORK PERFORMED BY THE FABRICATOR ARE IN CONFORMANCE WITH THE CONSTRUCTION DOCUMENTS.
      d. IF FABRICATION IS NOT PERFORMED BY AN APPROVED FABRICATOR WELDING INSPECTION REPORTS MUST BE SUBMITTED TO THE BUILDING OFFICIAL BY AN APPROVED TESTING AGENCY.
         e.a. NONDESTRUCTIVE TESTING (NDT) MAY BE PERFORMED BY THE FABRICATOR, HOWEVER THE QA AGENCY SHALL REVIEW THE FABRICATOR'S NDT REPORTS.

   B. WOOD BUILDINGS
      a. WOOD STRUCTURAL PANELS (SHEATHING) SHALL BE IDENTIFIED BY THE APA TRADEMARK.

PRE-FABRICATED WOOD TRUSS NOTES

1. THE DESIGN OF METAL PLATE CONNECTED WOOD TRUSSES SHALL BE IN ACCORDANCE WITH THE FOLLOWING
   A. CODES AND STANDARDS:
      a. THE GOVERNING CODE LISTED IN THE PROJECT GENERAL NOTES
      b. MINIMUM DESIGN LOADS FOR BUILDINGS AND OTHER STRUCTURES (ASCE 7-16)
      c. NATIONAL DESIGN STANDARD FOR WOOD CONSTRUCTION AND SUPPLEMENT (ANSI/AWC NDS-2018)
      d. SPECIAL DESIGN PROVISIONS FOR WIND & SEISMIC (AWC SDPWS-2021)
      e. THE NATIONAL DESIGN STANDARD FOR METAL PLATE CONNECTED WOOD TRUSS CONSTRUCTION (ANSI/TPI 1-2014)
   B. DESIGN CRITERIA:
      a. TRUSSES SHALL BE DESIGNED FOR THE FOLLOWING MINIMUM VERTICAL LOADS AND OTHER LOADS INDICATED ON THE CONSTRUCTION DOCUMENTS (ATTIC MECHANICAL UNITS, ETC.)

         ROOF TRUSS LOADING:
         ASPHALT SHINGLE W/ GYP CEILING:
         TOP-CHORD DEAD LOAD: 12.6 PSF * (11.5 PSF SUPERIMPOSED)
         BOT CHORD DEAD LOAD: 8.3 PSF (6.6 PSF SUPERIMPOSED)
         ROOF - LIVE LOAD: 20 PSF
         ASPHALT SHINGLE W/ STUCCO CEILING:
         TOP-CHORD DEAD LOAD: 12.6 PSF * (11.5 PSF SUPERIMPOSED)
         BOT CHORD DEAD LOAD: 12.7 PSF (11.1 PSF SUPERIMPOSED)
         ROOF - LIVE LOAD: 20 PSF

         DEFLECTION CRITERIA:
         DEAD + LIVE LOAD L/240
         LIVE LOAD ONLY L/360

         *INCLUDES 4 PSF ALLOWANCE FOR PV PANELS

      b. ( ) INDICATES HORIZONTAL SEISMIC/WIND LOAD ON COLLECTOR TRUSSES. THE TRUSS DESIGNER SHALL DESIGN FOR THE TRUSSES FOR THE INDICATED HORIZONTAL LOAD ACTING IN BOTH THE TOP AND BOTTOM TRUSS CHORDS AND FOR THE TRANSFER OF THE FORCE TO THE CHORDS THROUGH THE WEB.
2. CONTRACTOR REQUIREMENTS:
   A. THE CONTRACTOR SHALL MEET ALL THE REQUIREMENTS LISTED IN SECTION 2.3.4 OF ANSI/TPI 1-2014 INCLUDING THE FOLLOWING:
      a. MEANS AND METHODS: THE CONTRACTOR IS RESPONSIBLE FOR ALL MEANS AND METHODS, TECHNIQUES, SEQUENCES, PROCEDURES, PROGRAMS AND SAFETY IN CONNECTION WITH THE RECEIPT, STORAGE, HANDLING, INSTALLATION, RESTRAINING, AND BRACING OF THE TRUSSES. REFER TO THE GUIDE TO GOOD PRACTICE FOR HANDLING, INSTALLING, RESTRAINING & BRACING OF METAL PLATE CONNECTED WOOD TRUSSES (BCSI-B1)
      b. TRUSS INSTALLATION SHALL COMPLY WITH INSTALLATION TOLERANCES SHOWN IN BCSI-B1
      c. TEMPORARY INSTALLATION RESTRAINT/BRACING FOR THE TRUSS SYSTEM AND THE PERMANENT TRUSS SYSTEM SHALL BE INSTALLED IN ACCORDANCE WITH BCSI-B2.
      d. CONSTRUCTION LOADING ON TRUSSES SHALL BE DONE IN ACCORDANCE WITH BCSI-B4.
      e. TRUSS DAMAGE, JOBSITE MODIFICATIONS & INSTALLATION ERRORS SHALL BE BROUGHT TO THE IMMEDIATE ATTENTION OF THE EOR AND THE TRUSS DESIGNER, REFERENCE BCSI-B5.
      f. SUBMIT THE DRAWINGS FROM THE TRUSS DESIGNER/MANUFACTURER TO THE BUILDING DEPARTMENT PRIOR TO FABRICATION FOR APPROVAL. A COPY OF THIS SUBMITTAL SHALL BE PROVIDED TO TEH ENGINEER OF RECORD FOR REVIEW OF GENERAL CONFORMANCE TO THE DESIGN INTENT. THE CONTRACTOR SHALL INCORPORATE THE TIME REQUIRED FOR THE SUBMITTAL TO BE REVIEWED, STAMPED AND APPROVED BY ALL PARTIES AND SHALL HAVE THE APPROVED TRUSS PLANS ON THE JOB SITE PRIOR TO FOUNDATION INSPECTION.
3. TRUSS DESIGNER REQUIREMENTS:
   A. THE TRUSS DESIGNER SHALL MEET ALL THE REQUIREMENTS LISTED IN SECTION 2.3.5 OF ANSI/TPI 1-2014 INCLUDING THE FOLLOWING:
      a. TRUSS DESIGNER SHALL SUPERVISE THE PREPARATION OF THE TRUSS DESIGN DRAWINGS WHICH SHALL CONTAIN THE INFORMATION LISTED IN SECTION 2.3.5.5 OF ANSI/TPI 1-2014. THIS INCLUDES ALL TRUSS TO TRUSS CONNECTIONS, AND DETAILS FOR THE "CALIFORNIA FILL" AREAS.
      b. TRUSS DESIGNER SHALL COMPLY WITH THE REFERENCED CODE AND DESIGN CRITERIA ABOVE.
      c. TRUSS DESIGNER SHALL SHOW ALL HANGERS, BRACING AND RESTRAINTS AS WELL AS METHOD OF RESTRAINT/BRACING ON THE TRUSS PLANS TO MEET ANY SEISMIC AND WIND REQUIREMENTS OF THE CODE.
      d. SUBMIT TRUSS DESIGN DRAWINGS INCLUDING ALL RELEVANT DETAILS FOR THE FABRICATION OF THE TRUSSES AND PREPARE CALCULATIONS. ALL PLANS,DETAILS AND CALCULATIONS FOR THE TRUSSES SHALL BE STAMPED AND SIGNED BY A LICENSED PROFESSIONAL ENGINEER (CIVIL OR STRUCTURAL), LICENSED TO PRACTICE IN THE STATE OF CALIFORNIA.

WOOD STRUCTURAL PANELS (SHEATHING)

1. WOOD STRUCTURAL PANELS SHALL MEET THE FOLLOWING MINIMUM STANDARDS EXCEPT WHERE OTHERWISE NOTED:

WOOD STRUCTURAL PANEL PROPERTIES

USE	PLY	BOND CLASSIFICATION [C]	SHEATHING GRADE	PERFORMANCE RATING	SPAN RATING	RATING [B]	REFERENCE [A]
ROOF	5	EXPOSURE 1	REFER TO TYPICAL DIAPHRAGM SCHEDULE			APA	2022 CBC 2303.1.5 (DOC PS 1-09 OR PS 2-10)
FLOOR	5	EXPOSURE 1	REFER TO TYPICAL DIAPHRAGM SCHEDULE			APA	
WALL [D]	5	EXPOSURE 1	REFER TO TYPICAL SHEAR WALL SCHEDULE			APA	

TABLE NOTES:
   A. WOOD STRUCTURAL PANELS SHALL CONFORM TO THE REQUIREMENTS FOR THEIR TYPE IN ACCORDANCE WITH THE FOLLOWING VOLUNTARY STANDARDS BY THE ENGINEERED WOOD ASSOCIATION (APA):
      a. VOLUNTARY PRODUCT STANDARD, STRUCTURAL PLYWOOD, PS 1-09
      b. VOLUNTARY PRODUCT STANDARD, PERFORMANCE STANDARD FOR WOOD-BASED STRUCTURAL-USE PANELS, PS 2-10

   B. WOOD STRUCTURAL PANELS SHALL BE IDENTIFIED BY THE APA TRADEMARK INDICATING CONFORMANCE TO THE APPLICABLE VOLUNTARY STANDARD

   C. WHERE PANELS ARE EXPOSED TO REPEATED WETTING AND REDRYING, LONG-TERM EXPOSURE TO WEATHER, OR CONDTIONS OF SIMILAR SEVERITY, "EXTERIOR" APA RATED PLYWOOD SHEATHING SHALL BE USED. C-D "EXPOSURE 1" APA RATED PLYWOOD SHEATHING (CDX) SHALL NOT BE USED FOR CONDITIONS INVOLVING LONG-TERM EXPOSURE TO WEATHER.
      a. EXCEPTION: WOOD STRUCTURAL PANEL ROOF SHEATHING EXPOSED TO THE OUTDOORS ON THE UNDERSIDE IS PERMITTED TO BE "EXPOSURE 1" TYPE.
      b. WOOD STRUCTURAL PANELS TO BE USED AS SIDING SHALL COMPLY WITH ANSI/APA PRP-210.
   D. ORIENTED STRAND BOARD (OSB) WITH EQUIVALENT CLASSIFICATION AND RATINGS MAY BE USED IN LIEU OF PLYWOOD FOR WOOD STRUCTURAL PANEL WALL SHEATHING.

2. TRANSPORTATION, STORAGE, AND HANDLING:

   A. TRANSPORTATION
      a. IN TRANSPORTING PANELS ON OPEN TRUCK BEDS, COVER THE BUNDLES WITH A TARP.

   B. STORAGE
      a. ALWAYS STORE THE PANELS UNDER COVER WHENEVER POSSIBLE
      b. WHEN STORING PANELS OUTSIDE STACK THEM ON A LEVEL SURFACE ON TOP OF STRINGERS OR OTHER BLOCKING, THREE STRINGERS MINIMUM.
      c. NEVER LEAVE PANELS IN CONTACT WITH THE GROUND
      d. COVER THE STACK WITH A PLASTIC TARP, ENSURING THAT THE BUNDLE IS WELL VENTILATED TO PREVENT MILDEW.
      e. IF MOISTURE ABSORPTION IS EXPECTED, CUT THE STEEL BAND TO PREVENT DAMAGE
      f. KEEP SANDED OR OTHER APPEARANCE GRADE PANELS AWAY FROM HIGH TRAFFIC AREAS

   C. HANDLING
      a. ALWAYS PROTECT ENDS AND EDGES, ESPECIALLY TONGUE AND GROOVE PRODUCTS, FROM PHYSICAL DAMAGE.
      b. ACCLIMATIZE THE PANELS FOR 24 HOURS MINIMUM BEFORE INSTALLATION BY STANDING THE PANELS ON EDGE WITH A GAP BETWEEN EACH TO ALLOW FOR AIR CIRCULATION OR PER MANUFACTURER'S RECOMMENDATIONS.

3. PLYWOOD ORIENTATION

   A. ROOF AND FLOOR SHEATHING SHALL BE LAID WITH THE GRAIN OF THE OUTER PILES PERPENDICULAR TO THE FRAMING MEMBERS, SHALL BE CONTINUOUS OVER 2 JOIST BAYS MINIMUM AND END JOINTS SHALL BE JOINED OVER FRAMING AND STAGGERED. LEAVE A 1/8" GAP BETWEEN PANELS TO ALLOW FOR PANEL EXPANSION UNLESS RECOMMENDED OTHERWISE BY THE PANEL MANUF. REFER TO SPECIFIC DETAILS IN THE DRAWINGS FOR FURTHER PARAMETERS.

   B. PLYWOOD OR OSB WALL SHEATHING MAY BE APPLIED VERTICALLY OR HORIZONTALLY. ALL END JOINTS BE JOINED OVER FRAMING AND STAGGERED.
4. BLOCKING:

   A. ROOF: ALL ROOF SHEATHING SHALL BE BLOCKED UNLESS SPECIFICALLY ALLOWED ON PLANS. WHERE PERMITTED TO BE UNBLOCKED, ALL UNBLOCKED EDGES SHALL BE TONGUE AND GROOVE.

   B. ALL FLOOR SHEATHING SHALL BE BLOCKED UNLESS SPECIFICALLY ALLOWED ON PLANS. WHERE PERMITTED TO BE UNBLOCKED, ALL UNBLOCKED EDGES SHALL BE TONGUE AND GROOVE.

   C. WALLS: ALL SHEAR WALLS SHALL BE FULLY BLOCKED AT PLYWOOD EDGES.

5. FASTENERS

   A. USE SHEATHING NAILS SAME GAUGE AS COMMON WIRE NAILS WITH LENGTHS AT LEAST EQUAL TO SHEATHING THICKNESS PLUS REQUIRED PENETRATION PER AWS SDPWS TABLE 4.2A OR 4.3A (AS REQUIRED).

   B. EQUIVALENT PNEUMATIC DRIVE NAILS OR STAPLES MAY BE USED IF FASTENER MANUFACTURER HAS RECEIVED ICC OR IAPMO APPROVAL FOR THE INTENDED US. FASTENERS TO BE SUBSTITUTED SHALL BE EQUIVALENT IN LATERAL AND WITHDRAWAL STRENGTH TO THE SIZE OF COMMON NAIL SPECIFIED.

   C. USE OF MACHINE NAILING IS SUBJECT TO A SATISFACTORY JOB SITE DEMONSTRATION FOR EACH PROJECT AND THE APPROVAL BY THE PROJECT ARCHITECT OR STRUCTURAL ENGINEER. THE APPROVAL IS SUBJECT TO CONTINUED SATISFACTORY PERFORMANCE. MACHINE NAILING WILL NOT BE APPROVED IN 5/16" PLYWOOD OR OSB SHEATHING. IF NAIL HEADS PENETRATE THE OUTER PLY MORE T HAN WOULD BE NORMAL FOR A HAND HAMMER OR IF MINIMUM ALLOWABLE EDGE DISTANCES ARE NOT MAINTAINED, THE PERFORMANCE WILL BE DEEMED UNSATISFACTORY.

   D. TYPICAL NAILING SHALL BE 10D AT 6" O.C. AT ALL SUPPORTED EDGES AND OVER SHEAR WALLS, AND 10D AT 12" O.C. AT ALL INTERMEDIATE SUPPORTS, UNLESS OTHERWISE NOTED, SEE PLANS AND REFER TO SHEAR WALL SCHEDULE.

These plans are only to be used within City of Carpinteria jurisdiction. By using these standard plans ("ADU Plans") in accordance with the City of Carpinteria's Pre-Approved ADU Construction Plans Program, the User agrees to defend, indemnify, and hold harmless the City of Carpinteria and RRM from any and all claims, liabilities, suits, and demands on account of any injury, damage, or loss to persons or property, including injury or death, or economic losses, arising out of the use of these ADU Plans. The use of these ADU Plans does not eliminate or reduce the user's responsibility to verify any and all information herein.

CARPINTERIA ADU PROTOTYPES
SANTA BARBARA COUNTY, CA

GENERAL NOTES, SPECIAL INSPECTIONS & TESTS

DATE
05/09/2023

SHEET
S2-103

\\corp\rrm\on-site\2200\2277-01-CU21-Carpinteria-Downtown-Design-Overlay-SB2-Funded\Structural\ConDocs\Sheet-Files\2277-01-CU21 - S103.dwg, PLAN 2 - S103, May 09, 2023 2:11pm, ALopez

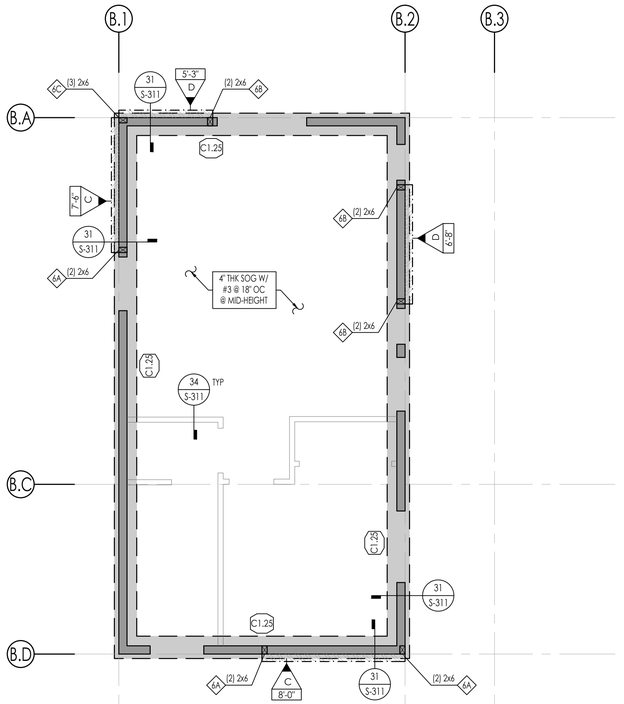

1 FOUNDATION PLAN - CALIFORNIA RANCH
SCALE: 1/4" = 1'-0"

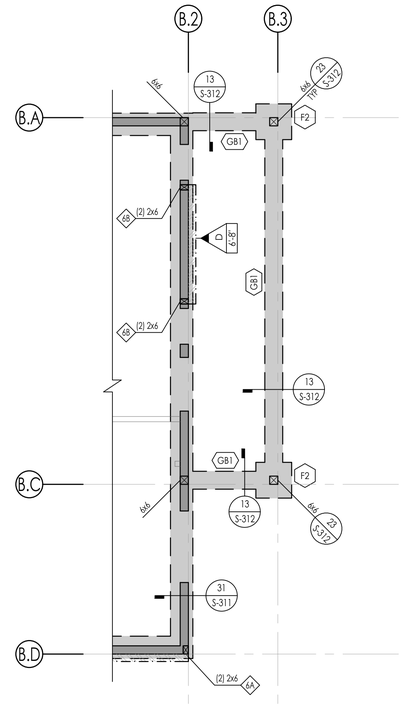

1 FOUNDATION PLAN - CALIFORNIA RANCH - PORCH OPTION
SCALE: 1/4" = 1'-0"

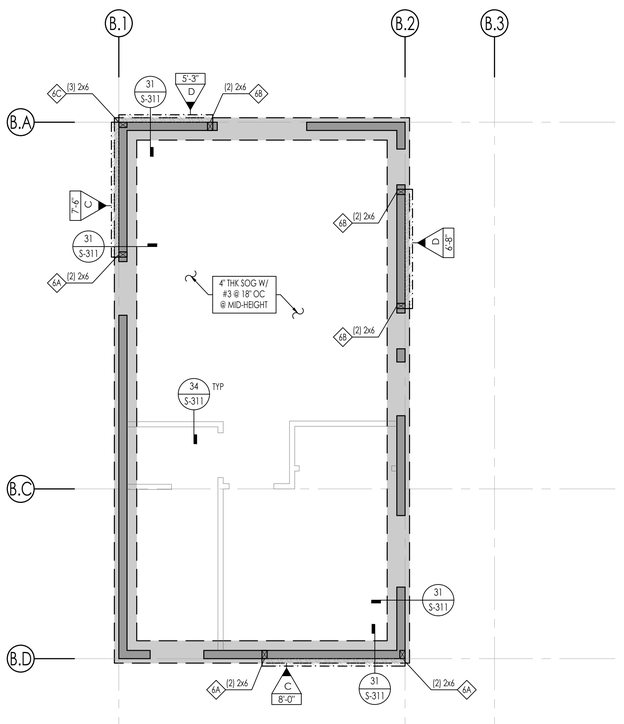

1 FOUNDATION PLAN - COASTAL COTTAGE
SCALE: 1/4" = 1'-0"

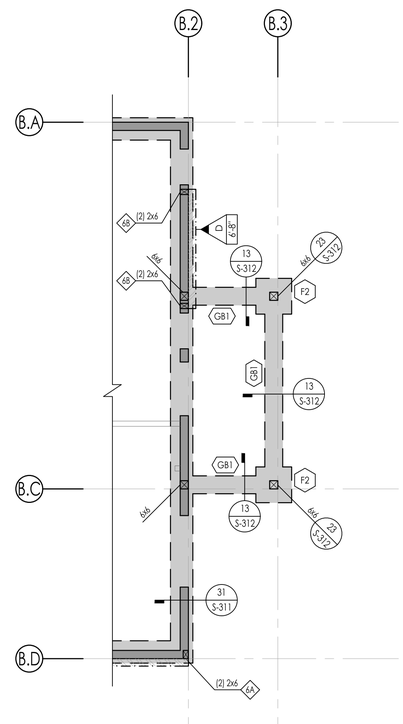

1 FOUNDATION PLAN - COASTAL COTTAGE - PORCH OPTION
SCALE: 1/4" = 1'-0"

FOUNDATION PLAN NOTES

1. REFER TO THE FOLLOWING SHEETS FOR TYPICAL DETAILS:

DESCRIPTION	SHEET (S)
SYMBOLS AND ABBREVIATIONS	S-101
STRUCTURAL GENERAL NOTES	S-102 - S-103
TESTING AND INSPECTION	S-103
TYPICAL CONCRETE DETAILS	S-301
TYPICAL WOOD DETAILS	S-401 - S-404

2. SEE ARCHITECTURAL DRAWINGS FOR FINISHED FLOOR ELEVATIONS. REFERENCE FINISHED FLOOR ELEVATION = 0'-0" CORRESPONDS TO FINISHED FLOOR ELEVATION.
3. ALL DIMENSIONS SHOWN ARE FROM FACE OF CONCRETE/MASONRY, FACE OF SHEATHING, OR CENTERLINE OF COLUMN. ALL COLUMNS ARE CENTERED IN STUD WALLS, UNO.
4. FOR ANY DIMENSIONAL INFORMATION NOT SHOWN, SEE ARCHITECTURAL DRAWINGS.
5. SEE ARCHITECTURAL DRAWINGS FOR ANY EMBEDDED ITEMS AND ALL EXTERIOR CONCRETE PAVING.
6. SEE PLANS AND ARCHITECTURAL DRAWINGS FOR DEPRESSIONS AND/OR SLOPES IN CONCRETE SLABS.
7. SEE ARCHIECTURAL DRAWINGS FOR SIZE AND LOCATION OF ALL DOOR AND WINDOW OPENINGS IN BEARING AND NON-BEARING WALLS.
8. SEE ARCHITECTURAL DRAWINGS FOR LOCATION OF INTERIOR NON-BEARING PARTITIONS.
9. SEE ARCHITECTURAL, PLUMBING, MECHANICAL AND ELECTRICAL DRAWINGS FOR ADDITIONAL EMBEDDED ITEMS AND SLAB PENETRATIONS.
10. FOR TYPICAL SLAB-ON-GRADE REQUIREMENTS, INCLUDING SLAB JOINTS, SEE DETAIL 31/S-301.
11. ALL POSTS IN 4" WALLS SHALL BE 4x4, UNLESS NOTED OTHERWISE
    ALL POSTS IN 6" WALLS SHALL BE 6x6, UNLESS NOTED OTHERWISE
12. PLATE WASHERS ARE REQUIRED FOR ALL SILL PLATE ANCHOR BOLTS. REFER TO 34/S-402 FOR PLATE WASHER REQUIREMENTS AT SHEAR WALLS.
13. ALL HOLDOWN ANCHOR NUTS SHALL BE TIGHTENED JUST PRIOR TO COVERING.
14. ALL BOLT HOLES IN WOOD MEMBERS, SHALL BE DRILLED A MAXIMUM OF 1/16" OVERSIZED. INSPECTOR TO VERIFY.
15. THE BUILDING PAD SHALL BE PREPARED AS OUTLINED IN DETAIL 53/S-301, THE BUILDING OFFICIAL SHALL REQUIRE PAD CERTIFICATION BY A GEOTECHNICAL ENGINEER AT THEIR DISCRETION.
16. BOTTOM OF FOOTING SHALL BE, UNLESS DEEPER FOUNDATIONS ARE REQUIRED BY THE BUILDING OFFICIAL:
    A. 18" BELOW PAD OR ADJACENT GRADE AT PERIMETER, WHICHEVER IS DEEPER, UNO.
    B. 18" BELOW PAD OR ADJACENT GRADE AT INTERIOR GRADE BEAMS, WHICHEVER IS DEEPER, UNO.
    NOTE: FOOTING MUST BE DEEPENED LOCALLY PER DETAIL 32/S-301 TO ACCOMMODATE ANCHOR BOLT HOLDOWN EMBED DEPTHS.

SYMBOL LEGEND

XX'-X"
X

INDICATES SHEAR WALL TYPE AND LENGTH,
SEE SCHEDULE ON 13/S-402

SCHEDULES

HOLDOWN SCHEDULE

SPECIFIES HOLDOWN/ STRAP DETAIL	1x INDICATES HOLDOWN/ STRAP TYPE	DETAIL
6x	INDICATES SIMPSON SSTB HOLDOWN TO: CONC FOUNDATION:	12/S-311

CONTINUOUS FOOTING SCHEDULE

MARK	WIDTH	MIN EMBED BELOW LOWEST PAD GRADE	LONG REINF	TRANS REINF	DETAIL
C1.25	1'-3"	SEE NOTE 16	(2) #5 T&B	#3 @ 12" OC, BOT	31/S-311

GRADE BEAM SCHEDULE

TYPE	WIDTH	THICKNESS	MIN EMBED BELOW LOWEST PAD GRADE	LONG REINF	TRANS REINF	DETAIL
GB1	1'-0"	1'-0"	SEE NOTE 16	(2) #4 @ TOP (2) #4 @ BOT	#3 @ 24" OC	13/S-312

PAD FOOTING SCHEDULE

TYPE	WIDTH	LENGTH	THICKNESS	MIN EMBED BELOW LOWEST PAD GRADE	TOP REINF	BOT REINF	DETAIL
F2	2'-0"	2'-0"	1'-6"	SEE NOTE 16	(3) #5, EW	(3) #5 @, EW	23/S-312

NOTE: FOOTING MUST BE DEEPENED LOCALLY PER DETAIL 32/S-301 TO ACCOMMODATE AB HOLDOWN EMBED DEPTHS

These plans are only to be used within City of Carpinteria jurisdiction. By using these standard plans ("ADU Plans") in accordance with the City of Carpinteria's Pre-Approved ADU Construction Plans Program, the User agrees to defend, indemnify, and hold harmless the City of Carpinteria and RRM from any and all claims, liabilities, suits, and demands on account of any injury, damage, or loss to persons or property, including injury or death, or economic losses, arising out of the use of these ADU Plans. The use of these ADU Plans does not eliminate or reduce the user's responsibility to verify any and all information herein.

CARPINTERIA ADU PROTOTYPES

SANTA BARBARA COUNTY, CA

FOUNDATION PLAN

DATE
05/09/2023

SHEET
S2-201

\\corp\rrm\on-site\2000\2277-01-C1021-Carpinteria-Downtown-Design-Overlay-SB2-Funded\Structural\CorrDocs\Sheet-Files\Plan 2\2277-01-C1021 - Plan 2.dwg, S1-201, May 09, 2023 2:11pm, ALopez

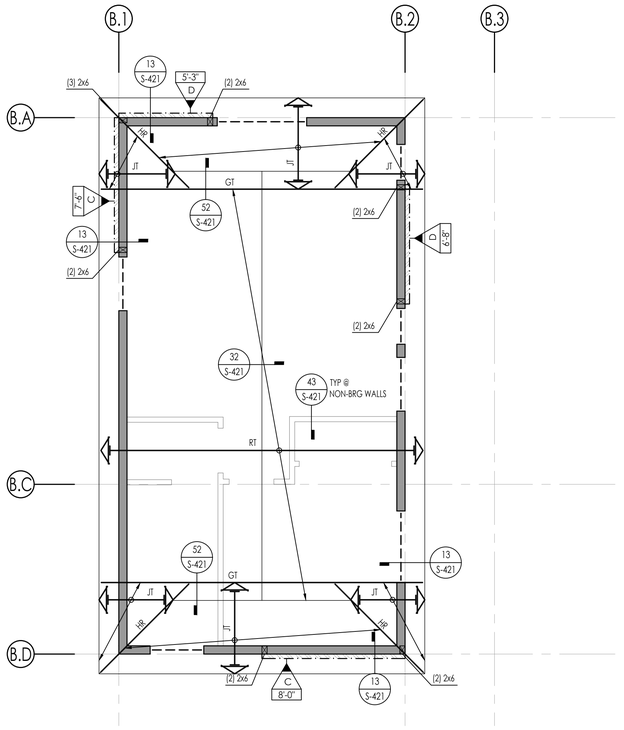

1 ROOF FRAMING PLAN - CALIFORNIA RANCH
SCALE: 1/4" = 1'-0"

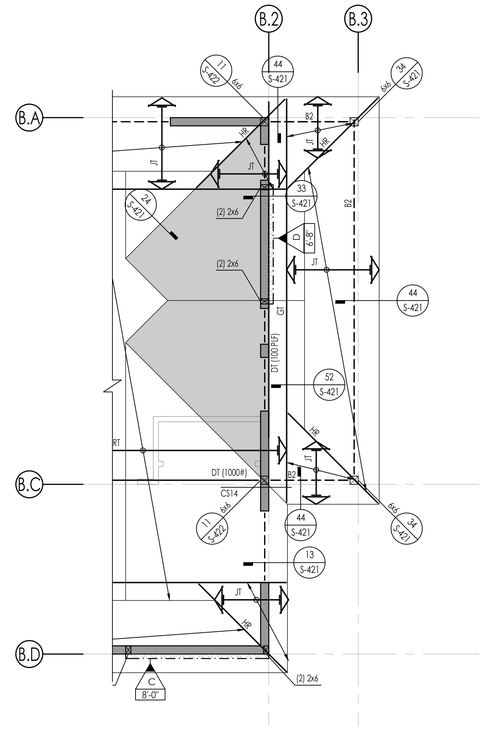

1 ROOF FRAMING PLAN - CALIFORNIA RANCH - PORCH OPTION
SCALE: 1/4" = 1'-0"

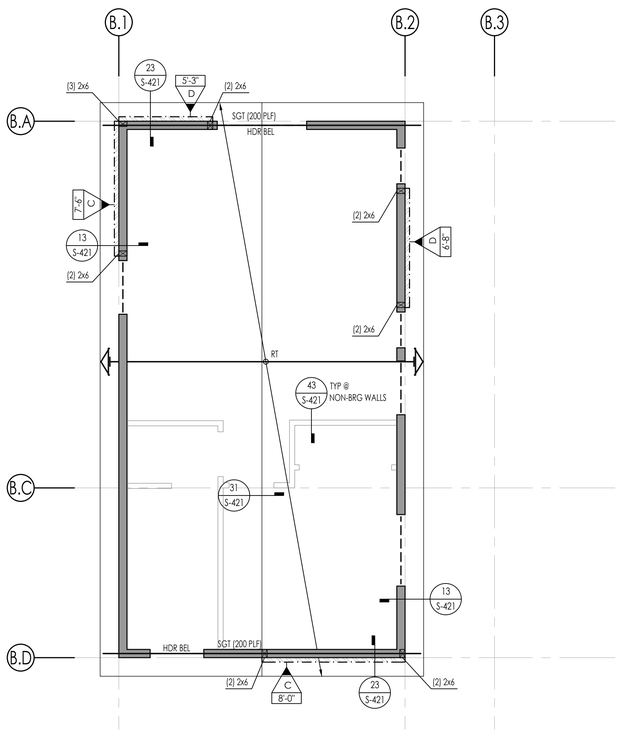

1 ROOF FRAMING PLAN - COASTAL COTTAGE
SCALE: 1/4" = 1'-0"

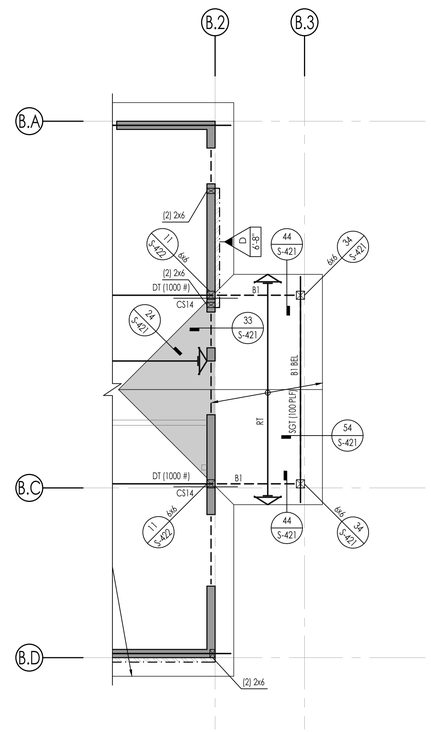

1 ROOF FRAMING PLAN - COASTAL COTTAGE - PORCH OPTION
SCALE: 1/4" = 1'-0"

ROOF FRAMING NOTES

1. SEE ARCHITECTURAL DRAWINGS FOR ALL DIMENSIONS AND ELEVATIONS INCLUDING, BUT NOT LIMITED TO THE FOLLOWING, ALL DIMENSIONS TO BE VERIFIED PRIOR TO CONSTRUCTION:
   A. GRID DIMENSIONS AND HORIZONTAL CONTROL
   B. ALL DIMENSIONS, ELEVATIONS, FINISH SURFACE, SLOPES, DRAINS, SLAB DEPRESSIONS, ETC
   C. LOCATION AND EXTENT OF EXTERIOR WALL ASSEMBLIES AND OPENINGS
   D. ALL NON STRUCTURAL WALLS
2. REFER TO THE FOLLOWING SHEETS FOR TYPICAL DETAILS:

DESCRIPTION	SHEET (S)
SYMBOLS AND ABBREVIATIONS	S-101
STRUCTURAL GENERAL NOTES	S-102 - S-103
TESTING AND INSPECTION	S-103
TYPICAL CONCRETE DETAILS	S-301
TYPICAL WOOD DETAILS	S-401 - S-404

3. SEE ARCHITECTURAL DRAWINGS FOR ALL TOP OF SHEATHING AND TOP OF WALL ELEVATIONS.
4. SEE ARCHITECTURAL, PLUMBING, MECHANICAL AND ELECTRICAL DRAWINGS FOR SIZE AND LOCATION OF PIPES, DUCTS AND OTHER ROOF PENETRATIONS. FOR ROOF PENETRATIONS NOT SHOWN ON ROOF FRAMING PLAN. SEE DETAIL 23/S-403 FOR TYPICAL OPENINGS, UNO.
5. ALL POSTS IN 6" WALLS SHALL BE 6x6, UNLESS NOTED OTHERWISE.

   TYPICAL WALL FRAMING SHALL BE:
   2x6 @ 16" OC @ ALL EXTERIOR WALLS, UNO
   2x6 @ 16" OC @ ALL INTERIOR BEARING WALLS, UNO
   2x4 @ 16" @ ALL INTERIOR NON-BEARING WALLS, UNO
6. ALL INTERIOR WALLS NOT SHOWN ON THE STRUCTURAL FRAMING PLANS BUT SHOWN ON THE ARCHITECTURAL DRAWINGS SHALL BE CONSTRUCTED PER NON-BEARING PORTION WALL DETAIL 43/S-401, UNO.
7. DIAPHRAGM TYPES:
   ALL ROOF DIAPHRAGMS SHALL BE TYPE A, UNO REFER TO 12/S-403
8. ALL LINES AND/OR MEMBERS INDICATED AS "STRUT" SHALL RECEIVE (2) ROWS OF BOUNDARY NAILING (BN), STGR.
9. TRUSS MEMBERS AND COMPONENTS SHALL NOT BE CUT, NOTCHED, DRILLED OR OTHERWISE ALTERED IN ANY WAY WITHOUT WRITTEN CONCURRENCE AND APPROVAL OF A REGISTERED DESIGN PROFESSIONAL.
10. ALTERATIONS RESULTING IN THE ADDITION OF LOADS TO ANY MEMBER (E.G. HVAC EQUIPMENT, WATER HEATER) SHALL NOT BE PERMITTED WITHOUT VERIFICATION THAT THE TRUSS IS CAPABLE OF SUPPORTING SUCH ADDITIONAL LOADING.

SYMBOL LEGEND

XX'-X" / X — INDICATES SHEAR WALL TYPE AND LENGTH, SEE SCHEDULE ON 13/S-402

INDICATES HEADER @ OPENING. REFER TO 32/S-401 FOR HEADER SIZE, UNO ON PLANS

(X) — INDICATES TOP PLATE SPLICE NAILING PER 33/S-403 NOTE THAT NAILING APPLIES TO ENTIRE LENGTH OF TOP PLATE. PROVIDE TYPE (C) SPLICE, UNO

INDICATES STRAP PER 31/S-404, UNO

SCHEDULES

HOLDOWN SCHEDULE

SPECIFIES HOLDOWN/ STRAP DETAIL	1x — INDICATES HOLDOWN/ STRAP TYPE	DETAIL
6x	INDICATES SIMPSON SSTB HOLDOWN TO: CONC FOUNDATION:	12/S-311

ROOF BEAM SCHEDULE

MARK	SIZE	REMARKS
B1	6x8	
B2	6x12	

PREFABRICATED ROOF TRUSS

1. FOR PREFABRICATED ROOF TRUSS NOTES SEE NOTES ON SHEET S-103

ROOF TRUSS SCHEDULE

MARK	DESCRIPTION	REMARKS
RT	ROOF TRUSS (COMMON)	24" OC MAX
SGT	STRUCTURAL GABLE TRUSS	
MT	MONO PITCH TRUSS	24" OC MAX
JT	JACK TRUSS	24" OC MAX
VJT	VALLEY JACK TRUSS	24" OC MAX
CJT	CORNER JACK TRUSS	
GT	GIRDER TRUSS	
MGT	MONO PITCH GIRDER TRUSS	
DT (#*)	DRAG TRUSS	
CGT	CALIFORNIA GIRDER TRUSS	
HR	HIP RAFTER / JACK RAFTER	
CHT	CALIFORNIA HIP TRUSS	24" OC MAX
SCT	SCISSOR TRUSS	24" OC MAX. CEILING SLOPE PER ARCH

(#*) - EQUALS DRAG FORCE IN LBS. DRAG FORCE IS AT A FACTORED LEVEL (0.7E) DRAG FORCES CALCULATED IN ACCORDANCE WITH ASCE 7-16 12.10.1.1. IN STRUCTURES ENTIRELY BRACED BY LIGHT FRAME SHEAR WALLS, OR PORTIONS THEREOF, DRAG MEMBERS SHALL BE DESIGNED TO RESIST FORCES USING THE LOAD COMBINATIONS OF ASCE 7-16 SECTION 12.4.2.3 IN ALL OTHER STRUCTURES DRAGS SHALL INCLUDE THE EFFECT OF OVER STRENGTH PER ASCE 7-16 12.4.3.2

These plans are only to be used within City of Carpinteria jurisdiction. By using these standard plans ("ADU Plans") in accordance with the City of Carpinteria's Pre-Approved ADU Construction Plans Program, the User agrees to defend, indemnify, and hold harmless the City of Carpinteria and RRM from any and all claims, liabilities, suits, and demands on account of any injury, damage, or loss to persons or property, including injury or death, or economic losses, arising out of the use of these ADU Plans. The use of these ADU Plans does not eliminate or reduce the user's responsibility to verify any and all information herein.

CARPINTERIA ADU PROTOTYPES

SANTA BARBARA COUNTY, CA

ROOF FRAMING PLAN

DATE
05/09/2023

SHEET
S2-202

\\corp\vrm\on-site\2000\2277-01-C121-Carpinteria-Downtown-Design-Overlay-SB2-Funded\Structural\CorrDocs\Sheet-Files\Plan 2\2277-01-C121 - Plan 2.dwg, S1-202, May 09, 2023 2:11pm, ALopez

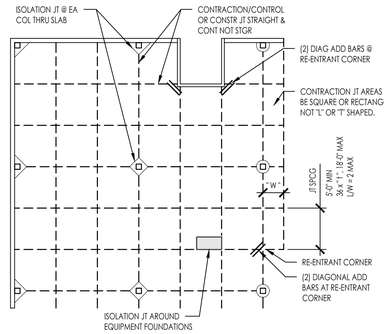

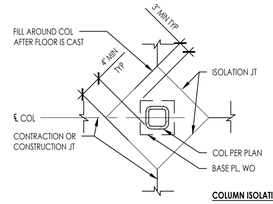

COLUMN ISOLATION JOINT

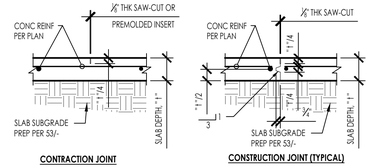

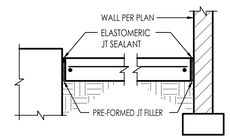

ISOLATION JOINT

NOTES:

1. IF SAW CUT CONTRACTION OR CONTROL JOINT IS USED, SAW-CUT WITHIN 24 HOURS. EARLY ENTRY SAWS MAY BE USED WITHIN 1-4 HOURS OF POUR, AND CONVENTIONAL SAWS 4-12 HOURS OF POUR DEPENDING ON WEATHER.
2. FILL CONTRACTION JOINT WITH AN ELASTOMERIC JOINT COMPOUND RATED FOR ITS USE. FOR INDUSTRIAL FLOORS SUBJECTED TO HARD WHEELED TRAFFIC, USE SEALANTS RATED FOR SUCH APPLICATIONS BY THE MANUFACTURER.
3. DOWELS IN INDUSTRIAL FLOOR APPLICATIONS SHOULD BE SMOOTH ALIGNED, AND SUPPORTED SO THEY WILL REMAIN PARALLEL IN BOTH HORIZONTAL AND VERTICAL PLANES DURING PLACING AND FINISHING.
4. IN STEEL AND/OR CONC. BUILDINGS DO NOT POUR DIAMOND UNTIL STRUCTURAL STEEL AND CONCRETE ABOVE HAS BEEN INSTALLED.

SLAB ON GRADE JOINTS

2277-01-CU21 - S301 NTS **31**

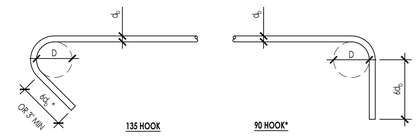

BAR SIZE	D
#3	1 1/2"
#4	2"
#5	2 1/2"

* PROVIDE $10d_b$ EXTENSIONS IN LIEU OF $6d_b$ AT ALL FRAME COLUMNS, GIRDERS, SHEAR WALLS AND SHEAR WALL BOUNDARY MEMBERS

REINF TIES AND STIRRUPS

2277-01-CU21 - S301 NTS **21**

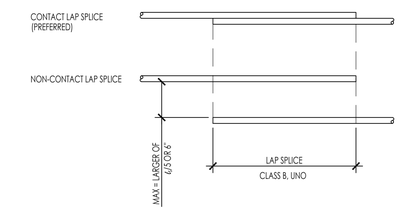

REINFORCING TENSION DEVELOPMENT LENGTH AND LAP SPLICE SCHEDULE						
BAR SIZE	DEVELOPMENT LENGTH, ℓ_d (CLASS A LAP SPLICE)			LAP SPLICE, ℓ_s (CLASS B LAP SPLICE)		
	f'c (psi)			f'c (psi)		
	2,500	3,000	4,000	2,500	3,000	4,000
#3	1'-6"	1'-5"	1'-3"	2'-0"	1'-10"	1'-7"
#4	2'-0"	1'-10"	1'-7"	2'-8"	2'-5"	2'-1"
#5	2'-6"	2'-4"	2'-0"	3'-3"	3'-0"	2'-7"
#6	3'-0"	2'-9"	2'-5"	3'-11"	3'-7"	3'-2"
#7	4'-5"	4'-0"	3'-6"	5'-9"	5'-2"	4'-6"
#8	5'-0"	4'-7"	4'-0"	6'-6"	5'-11"	5'-2"
#9	5'-8"	5'-2"	4'-6"	7'-4"	6'-9"	5'-10"
#10	6'-5"	5'-10"	5'-1"	8'-3"	7'-7"	6'-7"
#11	7'-1"	6'-6"	5'-7"	9'-2"	8'-5"	7'-3"

NOTES:

1. VALUES ABOVE ARE FOR REINFORCEMENT WITH THE FOLLOWING PARAMETERS:
   A. GRADE 60 REINFORCEMENT
   B. NORMAL WEIGHT CONCRETE
      a. FOR LIGHTWEIGHT CONCRETE MULTIPLY THE VALUES ABOVE BY 1.3
   C. NON-EPOXY COATED REINFORCEMENT
   D. HORIZONTAL BARS WITHOUT 12" OF CONCRETE BELOW (BOTTOM BARS), AND VERTICAL BARS
      a. FOR TOP BARS WITH 12" OR MORE OF CONCRETE BELOW THE BAR MULTIPLY THE VALUES ABOVE BY 1.3
   E. CLEAR SPACING NOT LESS THAN d_b, CLEAR COVER NOT LESS THAN d_b AND STIRRUPS THROUGH L_D NOT LESS THAN MIN

      OR

      CLEAR SPACING NO LESS THAN $2d_b$ AND CLEAR COVER NOT LESS THAN db
      a. FOR OTHER SPACING AND COVER CONDITIONS MULTIPLY THE VALUES ABOVE BY 1.5
   F. REINFORCEMENT NOT IN SHEAR WALLS
      a. FOR REINFORCEMENT IN SHEAR WALLS MULTIPLY THE VALUES ABOVE BY 1.25
2. THE MULTIPLIERS LISTED IN NOTE 1 ABOVE ARE CUMULATIVE INCREASES IN DEVELOPMENT/LAP SPLICE LENGTH.
3. ALL LAP SPLICES REFERENCED IN THE PLANS SHALL BE CLASS B UNLESS NOTED OTHERWISE.
4. WHEN REINFORCING BARS OF TWO SIZES ARE LAP-SPLICED IN TENSION, USE THE LARGER OF THE TENSION CLASS B, LAP SPLICE LENGTH (ℓ_s) OF THE SMALLER BAR, AND THE CLASS A, TENSION DEVELOPMENT LENGTH (ℓ_d) OF THE LARGER BAR.

REINF DEVELOPMENT LENGTH AND SPLICES

2277-01-CU21 - S301 NTS **12**

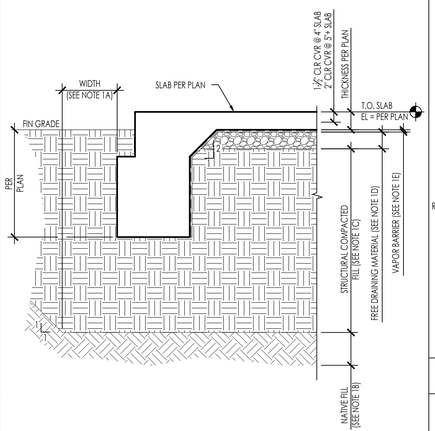

NOTES:

1. PREPARATION OF THE SLAB SUBGRADE SHALL BE BASED ON THE GEOTECHNICAL INVESTIGATION REPORT AS REFERENCED IN THE FOUNDATION GENERAL NOTES. THE FOLLOWING INFORMATION IS FOR REFERENCE ONLY.
   A. OVER-EXCAVATION SHALL EXTEND 5 FEET BEYOND PERIMETER FOUNDATION, TO PROPERTY LINES OR EXISTING IMPROVEMENTS, WHICHEVER IS LEAST.
   B. NATIVE MATERIALS
      a. SHALL BE OVER-EXCAVATED 36" BELOW (E) GRADE OR 18" BELOW BOTTOM OF FOOTINGS, WHICHEVER IS GREATEST.
      b. THE EXPOSED SURFACE SHALL BE SCARIFIED TO A DEPTH OF 6", MOISTURE CONDITIONED TO 3 PERCENT OVER OPTIMUM MOISTURE CONTENT AND COMPACTED TO A MINIMUM RELATIVE DENSITY OF 90 PERCENT (ASTM D1557)
   C. ENGINEERED COMPACTED FILL
      a. REFER TO THE GEOTECHNICAL INVESTIGATION REPORT FOR RECOMMENDATIONS FOR STRUCTURAL FILL
      b. STRUCTURAL FILL SHALL BE PLACED IN HORIZONTAL LAYERS, EACH APPROXIMATELY 8" THICK BEFORE COMPACTION, AND SHOULD BE CONDITIONS WITH WATER TO PRODUCE A SOIL WATER CONTENT NEAR OPTIMUM MOISTURE AND COMPACTED TO A MINIMUM RELATIVE DENSITY OF 90 PERCENT (ASTM D1557)
   D. 4" THICK, CLEAN FREE-DRAINING MATERIAL SUCH AS 3/4" COARSE AGGREGATE
   E. REFER TO GEOTECH REPORT AND ARCH DRAWINGS FOR VAPOR BARRIER. INSTALL PER MANUFACTURER'S RECOMMENDATIONS FOR SEALING OF PENETRATIONS, JOINTS AND EDGES.
      a. VAPOR BARRIER IS NOT TO BE PUNCTURED DURING CONSTRUCTION OF SLAB ON GRADE.
   F. 2" THICK OPTIONAL SAND LAYER, SHALL BE LIGHTLY MOISTENED PRIOR TO PLACING CONCRETE.

SLAB ON GRADE EDGE AND SUBGRADE PREP

2277-01-CU21 - S301 NTS **53**

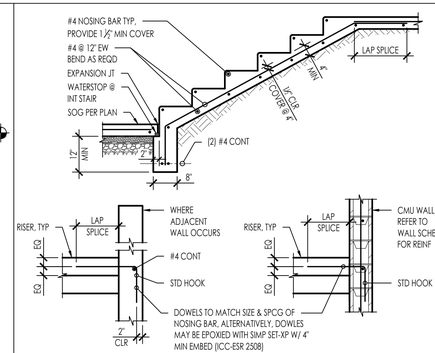

CONC STAIRS ON GRADE

2277-01-CU21 - S301 NTS **42**

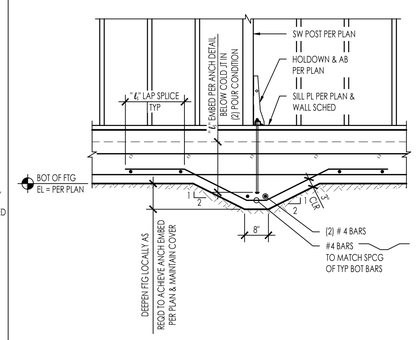

DEEPENED FTG @ ANCHOR BOLT

2277-01-CU21 - S301 NTS **32**

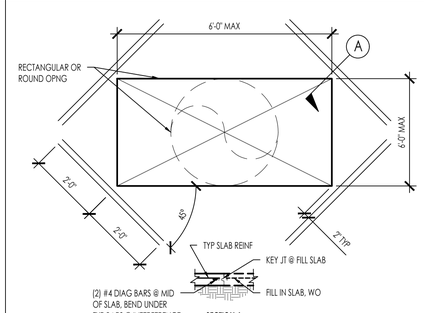

NOTES:

1. ELIMINATE BARS IF OPENING IS LESS THAN 2'-0" IN BOTH DIMENSIONS.
2. REFER TO DETAIL S3/- FOR SLAB ON GRADE SUBGRADE SUPPORT

SOG OPENING

2277-01-CU21 - S301 NTS **22**

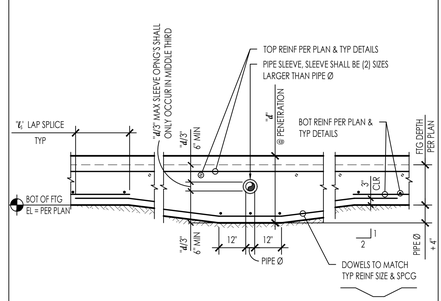

SLEEVE THROUGH FOUNDATION (SLAB TURN-DOWN)

2277-01-CU21 - S301 NTS **43**

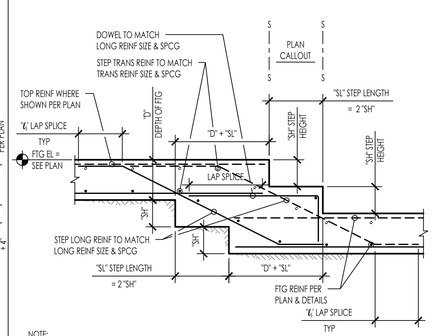

STEP FOOTING

2277-01-CU21 - S301 NTS **33**

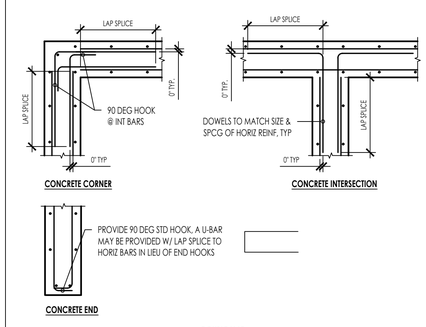

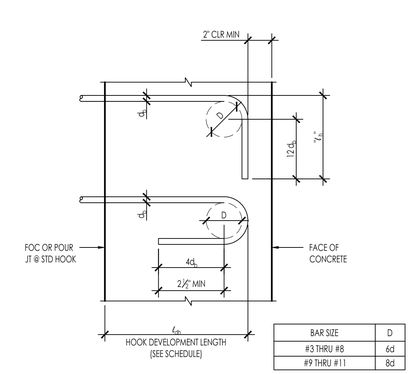

BAR SIZE	D
#3 THRU #8	6d
#9 THRU #11	8d

STANDARD HOOK DEVELOPMENT LENGTH "ℓ_{dh}"					
BAR SIZE	D	"ℓ_h"	NORMAL WEIGHT		
			2,500	3,000	4,000
#3	2 1/4"	6"	0'-9"	0'-9"	0'-8"
#4	3"	8"	1'-0"	0'-11"	0'-10"
#5	3 3/4"	10"	1'-3"	1'-2"	1'-0"
#6	4 1/2"	12"	1'-6"	1'-5"	1'-3"
#7	5 1/4"	1'-2"	1'-9"	1'-8"	1'-5"
#8	6"	1'-4"	2'-0"	1'-10"	1'-7"
#9	9 1/2"	1'-7 1/2"	2'-3"	2'-1"	1'-10"
#10	10 3/4"	1'-10"	2'-7"	2'-4"	2'-1"
#11	12"	2'-0 1/2"	2'-10"	2'-7"	2'-3"

NOTES:

1. ALL HOOKED BARS SHALL EXTEND AS FAR AS POSSIBLE WITH A MINIMUM 2" END COVER AND WITH EMBEDMENT NOT LESS THAN SHOWN ON THE SCHEDULE UNLESS NOTED OTHERWISE ON PLANS.
2. MINIMUM SIDE COVER = 2 1/2".
3. FOR LIGHTWEIGHT CONCRETE MULTIPLY LENGTHS IN SCHEDULE BY 1.3.

REINF HOOK DEVELOPMENT LENGTH AND BENDS

2277-01-CU21 - S301 NTS **14**

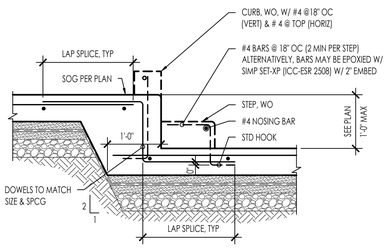

STEP IN CONCRETE SLAB ON GRADE

2277-01-CU21 - S301 NTS **54**

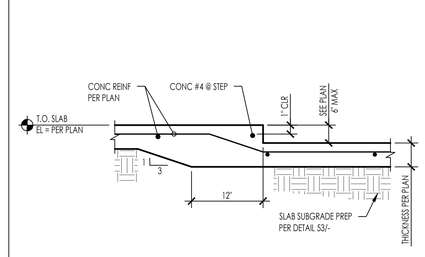

SLAB ON GRADE DEPRESSION

2277-01-CU21 - S301 NTS **44**

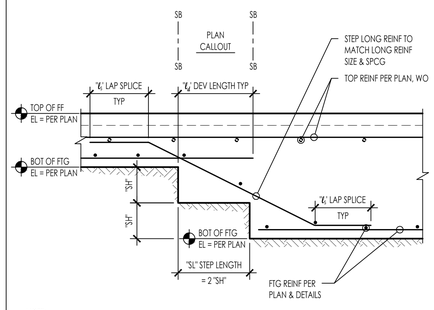

STEPPED FOOTING (BOTTOM ONLY)

2277-01-CU21 - S301 NTS **34**

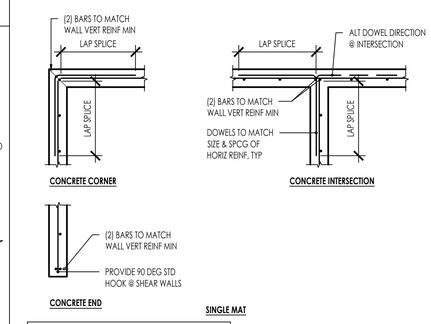

NOTE:
REINFORCEMENT SHOWN ON WALL ELEVATION(S), BOUNDARY REINFORCING DETAILS, AND OTHER SPECIFICALLY REFERENCED DETAILS SHALL TAKE PRECEDENCE OVER REINFORCEMENT SHOWN HERE.

CONC REINF @ INTERSECTION

2277-01-CU21 - S301 NTS **24**

These plans are only to be used within City of Carpinteria jurisdiction. By using these standard plans ("ADU Plans") in accordance with the City of Carpinteria's Pre-Approved ADU Construction Plans Program, the User agrees to defend, indemnify, and hold harmless the City of Carpinteria and RRM from any and all claims, liabilities, suits, and demands on account of any injury, damage, or loss to persons or property, including injury or death, or economic losses, arising out of the use of these ADU Plans. The use of these ADU Plans does not eliminate or reduce the user's responsibility to verify any and all information herein.

CARPINTERIA ADU PROTOTYPES

SANTA BARBARA COUNTY, CA

TYPICAL CONCRETE DETAILS

DATE
05/09/2023

SHEET
S2-301

\\corp\rm\on-site\2200\2277-01-CU21-Carpinteria-Downtown-Design-Overlay-182-Funded\Structural\CivilDocs\Sheet-Files\2277-01-CU21 - S301.dwg, PLAN 2 - S301, May 09, 2023 2:11pm, ALopez

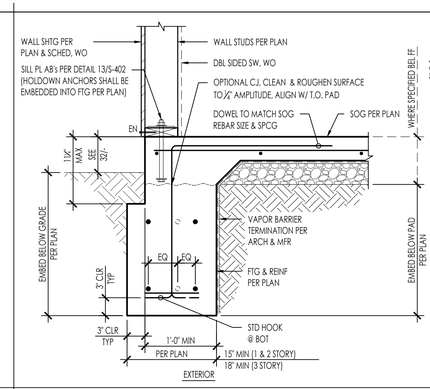

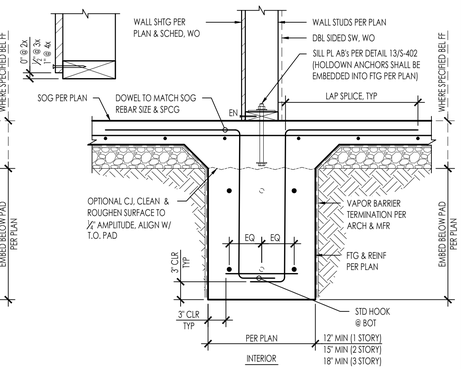

51 CONTINUOUS WALL FOOTING NTS 31

2277-01-CU21 - S311

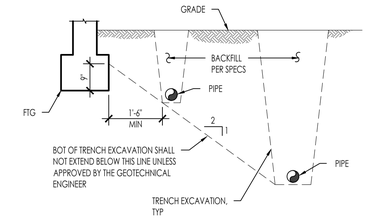

NOTES:
1. CONTRACTOR SHALL COORDINATE ALL PIPE LOCATIONS WITH BUILDING FOUNDATION REQUIREMENTS.
2. IF REQUIREMENTS AS SHOWN CANNOT BE MET STEP FOOTING PER TYPICAL "STEPPED FOOTING" DETAILS (33 / S-301) (34 / S-301)

21 PIPES PARALLEL TO FOOTINGS NTS

2277-01-CU21 - S311

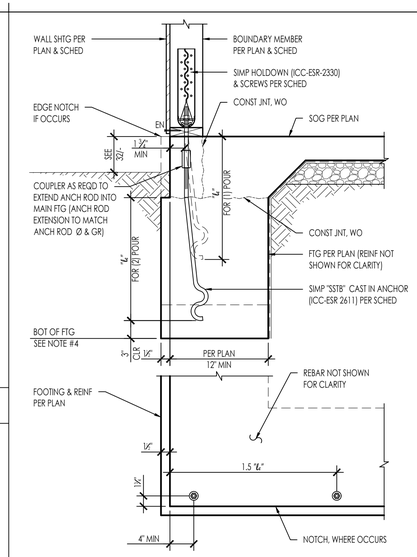

TYPE	HOLDOWN	ANCHOR	DIA [IN]	FASTENERS	BOUNDARY MEMBER MIN THICKNESS [IN]	MIN EMBED "L" [IN]	ALLOWABLE LOADS [lbs]	
							CORNER	MIDWALL
6A	HDU4-SDS2.5	SSTB16	⅞	10-SDS¼" x 2½"	3	12⅝	3,780	3,780
6B	HDU5-SDS2.5	SSTB20		14-SDS¼" x 2½"	3	16⅝	4,785	4,785
6C	HDU5-SDS2.5	SSTB24		14-SDS¼" x 2½"	3	20⅝	5,645*	5,645*
6D	HDQ8-SDS3	SSTB28	⅞	20-SDS¼" x 3"	4½	24⅞	9,230*	9,230*

1. MINIMUM EDGE DISTANCE IS SHOWN ABOVE, ANCHOR LOCATIONS PER PLAN
2. MINIMUM ANCHOR TO ANCHOR SPACING IS 3 L
3. * = CAPACITY LIMITED BY HOLDOWN
4. DEEPEN FOOTING AT HOLDOWN ANCHOR AS REQ'D PER DETAIL 32/-

12 SSTB ANCHOR & HOLDOWN @ FOUNDATION NTS

2277-01-CU21 - S311

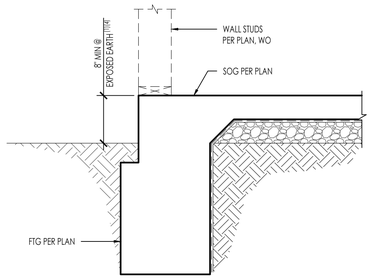

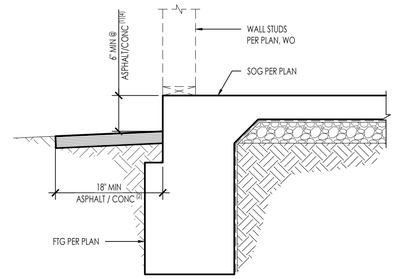

NOTES:
1. MIN DISTANCE TO EXPOSED EARTH APPLIES TO BOTH TURNED DOWN AND STEM WALL FOOTINGS
2. CONCRETE OR IMPERVIOUS SURFACE WITH ADEQUATE DRAINAGE AWAY FROM FOUNDATION (2% MIN SLOPE)
3. FOR BALANCE OF FOOTING INFO NOT SHOWN, SEE DETAIL 31/-
4. WHERE MINIMUM DISTANCE TO EXTERIOR FINISHED GRADE OR SURFACE CANNOT BE ACHIEVED, PROVIDE CONCRETE CURB PER DETAIL 33/-

52 MINIMUM DISTANCE FROM GRADE TO WOOD FRAMING NTS 32

2277-01-CU21 - S311

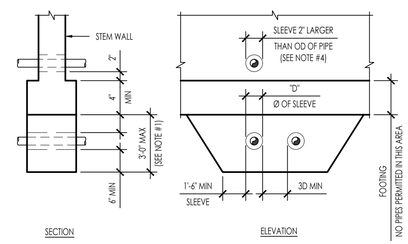

NOTES:
1. FOOTINGS SHALL BE STEPPED PER DETAIL 33/ & 34/S-301 SO THAT THIS DIMENSION DOES NOT EXCEED 3'-0".
2. CONTRACTOR SHALL COORDINATE ALL PIPE LOCATIONS WITH BUILDING FOUNDATION REQUIREMENTS.
3. TRENCH BELOW FOOTING SHALL BE FILLED WITH CONCRETE OR 3-SACK SLURRY BEFORE POURING FOOTING. CONCRETE FILL SHALL BE SAME WIDTH AS FOOTING AND FULL WIDTH OF PIPE TRENCH.
4. PIPES MAY BE WRAPPED IN 1" THICK LOOSE FOAM IN LIEU OF SLEEVING.
5. CONDUIT MAY BE RUN THRU STEM OR ENCASEMENT UNDER FOOTING WITHOUT SLEEVES OR FOAM WRAP.

22 PIPES PERPENDICULAR TO FOOTINGS W/ STEM WALL NTS

2277-01-CU21 - S311

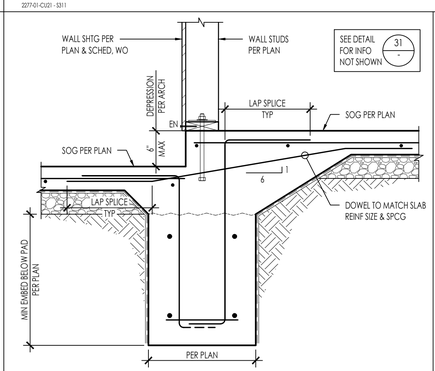

53 SOG DEPRESSION @ FTG NTS 43

2277-01-CU21 - S311

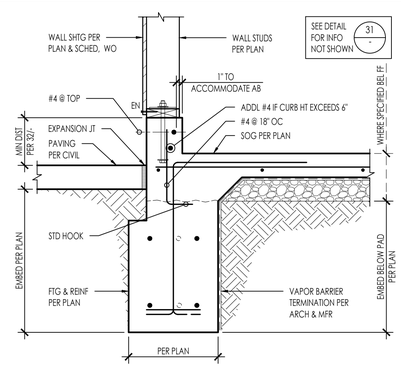

EXTERIOR CONTINUOUS WALL FTG W/ CURB NTS 33

2277-01-CU21 - S311

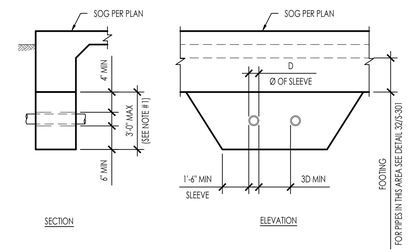

NOTES:
1. FOOTINGS SHALL BE STEPPED PER DETAIL 33/ & 34/S-301 SO THAT THIS DIMENSION DOES NOT EXCEED 3'-0".
2. TRENCH BELOW FOOTING SHALL BE FILLED WITH CONCRETE OR 3-SACK SLURRY BEFORE POURING FOOTING. CONCRETE FILL SHALL BE SAME WIDTH AS FOOTING AND FULL WIDTH OF PIPE TRENCH.
3. PIPES MAY BE WRAPPED IN 1" THICK LOOSE FOAM IN LIEU OF SLEEVING.
4. CONDUIT MAY BE RUN THRU STEM OR ENCASEMENT UNDER FOOTING WITHOUT SLEEVES OR FOAM WRAP.

23 PIPES PERPENDICULAR TO FOOTINGS NTS 13

2277-01-CU21 - S311

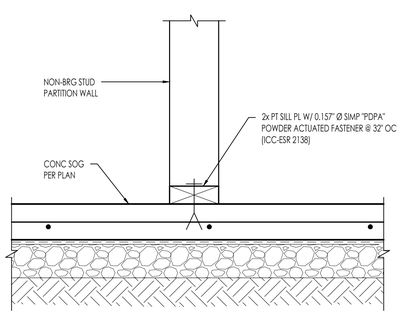

54 44 NON-BEARING WALL ANCHORAGE @ SOG NTS 34

2277-01-CU21 - S311

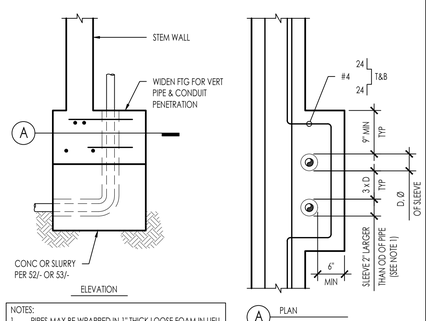

NOTES:
1. PIPES MAY BE WRAPPED IN 1" THICK LOOSE FOAM IN LIEU OF SLEEVING.
2. CONDUIT MAY BE ROUTED UP THROUGH FOOTING WITHOUT SLEEVES OR FOAM WRAP.

24 TYPICAL VERT PIPES OR COND THROUGH FOOTING NTS 14

2277-01-CU21 - S311

These plans are only to be used within City of Carpinteria jurisdiction. By using these standard plans ("ADU Plans") in accordance with the City of Carpinteria's Pre-Approved ADU Construction Plans Program, the User agrees to defend, indemnify, and hold harmless the City of Carpinteria and RRM from any and all claims, liabilities, suits, and demands on account of any injury, damage, or loss to persons or property, including injury or death, or economic losses, arising out of the use of these ADU Plans. The use of these ADU Plans does not eliminate or reduce the user's responsibility to verify any and all information herein.

CARPINTERIA ADU PROTOTYPES

SANTA BARBARA COUNTY, CA

CONCRETE DETAILS

DATE
05/09/2023

SHEET
S2-311

\\corp\rm\on-site\2200\2277-01-CU21-Carpinteria-Downtown-Design-Overlay-SB2-Funded\Structural\ConDocs\Sheet-Files\2277-01-CU21 - S311.dwg, PLAN 2 - S311, May 09, 2023 2:11pm, ALopez

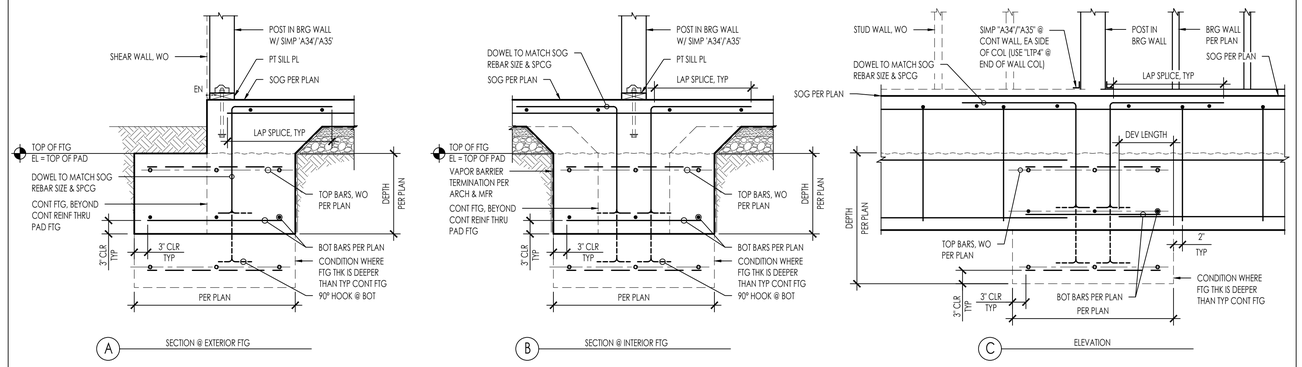

51 | 41 | SPREAD FOOTING @ BEARING WALL POST | 3/4" = 1'-0" | 11

2277-01-CU21 - S312

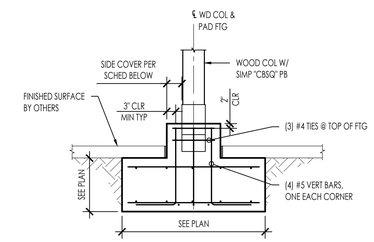

POST SIZE	MIN. SIDE COVER
4x4	0'-3"
6x6	0'-3"
8x8	0'-3"

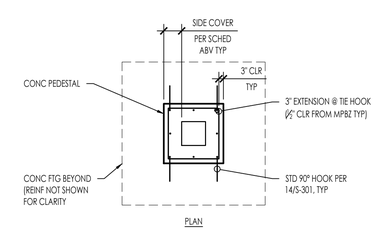

52 | 42 | 32

53 | 43 | 33 | PORCH PAD FOOTING | 1/2" = 1'-0" | 23

2272-01-CU22 - S312 - 23

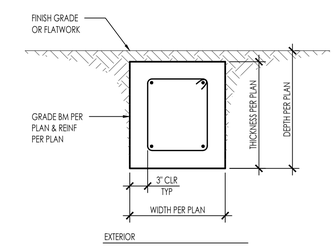

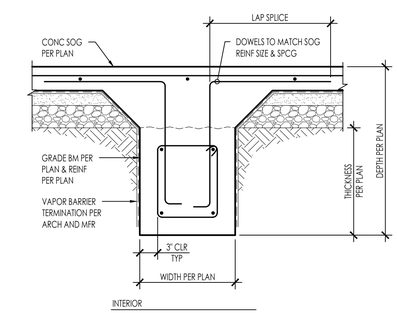

54 | 44 | 34 | 24 | GRADE BEAM | NTS | 13

2277-01-CU21 - S312

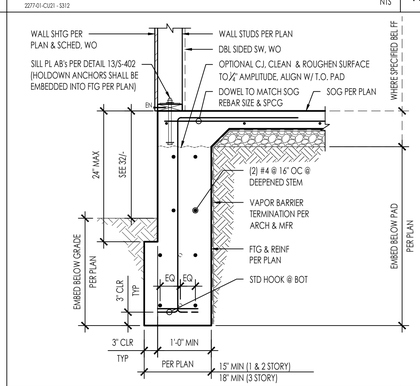

DEEPEND EXTERIOR FOOTING | 3/4" = 1'-0" | 14

2277-01-CU21 - S312

These plans are only to be used within City of Carpinteria jurisdiction. By using these standard plans ("ADU Plans") in accordance with the City of Carpinteria's Pre-Approved ADU Construction Plans Program, the User agrees to defend, indemnify, and hold harmless the City of Carpinteria and RRM from any and all claims, liabilities, suits, and demands on account of any injury, damage, or loss to persons or property, including injury or death, or economic losses, arising out of the use of these ADU Plans. The use of these ADU Plans does not eliminate or reduce the user's responsibility to verify any and all information herein.

CARPINTERIA ADU PROTOTYPES

SANTA BARBARA COUNTY, CA

CONCRETE DETAILS

DATE

05/09/2023

SHEET

S2-312

\\corp\rrm\on-site\2200\2277-01-CU21-Carpinteria-Downtown-Design-Overlay-SB2-Funded\Structural\ConDocs\Sheet-Files\2277-01-CU21 - S312.dwg, PLAN 12 - S312, May 09, 2023 - 2:11pm, ALopez

1-STORY		6 INCH WALLS			
1-STORY	OPENING WIDTH	6x HEADER	SILL AT WINDOW	POST / TRIMMER	KING STUDS
	UP TO 3'-0"	6x4	2x	2x6	2x6
	3'-0" - 5'-0"	6x6	2x	2x6	2x6
	5'-0" - 7'-0"	6x8	(2) 2x	2x6	(2) 2x6

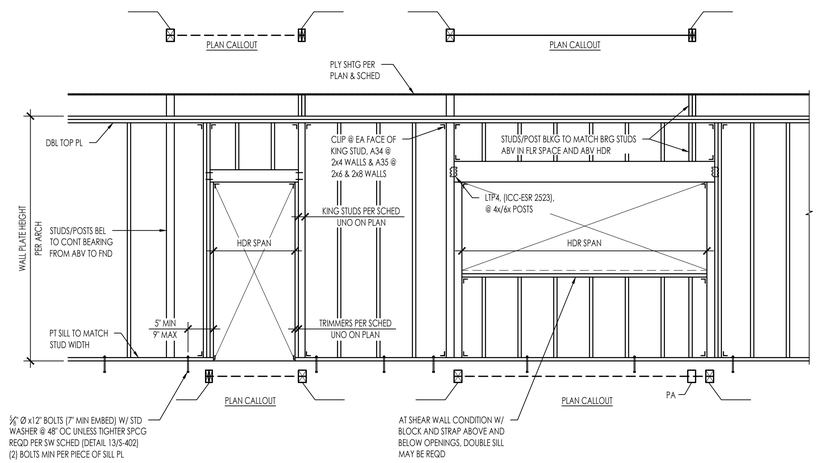

NOTES:
1. THIS DETAIL APPLIES AT ALL EXT WALLS AND INT LOAD BEARING WALLS AND ALSO APPLIES TO SHEAR WALL FRAMING
   A. FOR SHEAR WALLS SEE 34/S-402 FOR ADD'L REQUIREMENTS.
   B. FOR INTERIOR NON-BEARING PARTITIONS SEE DETAIL 43/-
2. HEADERS, KING STUDS AND OTHER REFERENCES ON PLAN GOVERN OVER THIS TYPICAL SCHED/DETAILS
3. PROVIDE A34 @ 4" WALLS & A35 @ 6" OR GREATER WALLS (ICC-ESR 2353)

EXTERIOR WALL / INTERIOR WALL BEARING WALL FRAMING

2277-01-CU21 - S401 NTS **32**

FASTENING SCHEDULE
PER 2022 CBC 2304.10.1

CONNECTION	FASTENING	LOCATION
1. BLOCKING BETWEEN CEILING JOISTS, RAFTERS OR TRUSSES TO TOP PLATE OR OTHER FRAMING BELOW	3-8d COMMON	EACH END, TOENAIL
2. BLOCKING BETWEEN RAFTERS OR TRUSS NOT AT THE WALL TO TOP PLATE, TO RAFTER OR TRUSS	2-8d COMMON	EACH END, TOENAIL
	2-16d COMMON	END NAIL
3. FLAT BLOCKING TO TRUSS AND WEB FILLER	16d COMMON @ 6" OC	FACE NAIL
4. CEILING JOIST TO TOP PLATE	3-8d COMMON	EACH JOIST, TOENAIL
5. CEILING JOIST NOT ATTACHED TO PARALLEL RAFTER, LAPS OVER PARTITIONS	3-16d COMMON	FACE NAIL
6. CEILING JOIST ATTACHED TO PARALLEL RAFTER (HEEL JOINT)	3-16d COMMON	FACE NAIL
7. COLLAR TIE TO RAFTER	3-10d COMMON	FACE NAIL
8. RAFTER OR ROOF TRUSS TO PLATE	3-10d COMMON	TOENAIL[b]
9. ROOF RAFTER TO RIDGE VALLEY OR HIP RAFTER; OR ROOF RAFTER TO 2-INCH RIDGE BEAM	2-16d COMMON	END NAIL
	3-10d COMMON	TOENAIL
10. STUD TO STUD AND ABUTTING STUDS AT INTERSECTING WALL CORNERS	16d COMMON	16" OC FACE NAIL
11. BUILT-UP HEADER (2" TO 2" HEADER)	16d COMMON	16" OC EACH EDGE, FACE NAIL
12. CONTINUOUS HEADER TO STUD	4-10d COMMON	TOENAIL
13. TOP PLATE TO TOP PLATE	16d COMMON	16" OC FACE NAIL
14. TOP PLATE TO TOP PLATE, AT END JOINTS	8-16d COMMON	EACH SIDE OF END JOINT, FACE NAIL (MINIMUM 24" LAP SPLICE LENGTH EACH SIDE OF END JOINT)
15. BOTTOM PLATE TO JOIST, RIM JOIST, BAND JOIST OR BLOCKING	2-16d COMMON	16" OC FACE NAIL
16. STUD TO TOP OR BOTTOM PLATE	4-8d COMMON	TOENAIL
	2-16d COMMON	END NAIL
17. TOP PLATES, LAPS AT CORNERS AND INTERSECTIONS	2-16d COMMON	FACE NAIL
18. JOIST TO SILL, TOP PLATE, OR GIRDER	3-8d COMMON	TOENAIL
20. RIM JOIST, BAND JOIST, OR BLOCKING TO TOP PLATE, SILL OR OTHER FRAMING BELOW	8d COMMON	6" OC, TOENAIL
21. 1"x6" SUBFLOOR OR LESS TO EACH JOIST	2-8d COMMON	FACE NAIL
22. 2" SUBFLOOR TO JOIST OR GIRDER	2-16d COMMON	FACE NAIL
23. BUILT-UP GIRDER AND BEAMS, 2" LUMBER LAYERS	20d COMMON (4" x 0.192")	32" OC FACE NAIL AT TOP AND BOTTOM STAGGERED ON APPOSITE SIDE
24. LEDGER STRIP SUPPORTING JOIST OR RAFTERS	3-16d COMMON	EACH JOIST OR RAFTER, FACE NAIL
26. JOIST TO BAND JOIST OR RIM JOIST	3-16d COMMON	END NAIL
27. BRIDGING OR BLOCKING TO JOIST, RAFTER OR TRUSS	2-8d COMMON	EACH END, TOENAIL

NOTES:
a. THIS NAILING SCHEDULE SHALL ONLY BE USED IF CONDITION IS NOT OTHERWISE DETAILED OR SPECIFIED ON THE CONSTRUCTION DOCUMENTS. COMMON NAILS SHALL BE USED EXCEPT WHERE OTHERWISE STATED
b. WHERE A RAFTER IS FASTENED TO AN ADJACENT PARALLEL CEILING JOIST IN ACCORDANCE WITH THIS SCHEDULE AND THE CEILING JOIST IS FASTENED TO THE TOP PLATE IN ACCORDANCE WITH THIS SCHEDULE, THE NUMBER OF TOENAILS IN THE RAFTER SHALL BE PERMITTED TO BE REDUCED BY ONE NAIL

NAILING SCHEDULE

2277-01-CU21 - S401 NTS **12**

These plans are only to be used within City of Carpinteria jurisdiction. By using these standard plans ("ADU Plans") in accordance with the City of Carpinteria's Pre-Approved ADU Construction Plans Program, the User agrees to defend, indemnify, and hold harmless the City of Carpinteria and RRM from any and all claims, liabilities, suits, and demands on account of any injury, damage, or loss to persons or property, including injury or death, or economic losses, arising out of the use of these ADU Plans. The use of these ADU Plans does not eliminate or reduce the user's responsibility to verify any and all information herein.

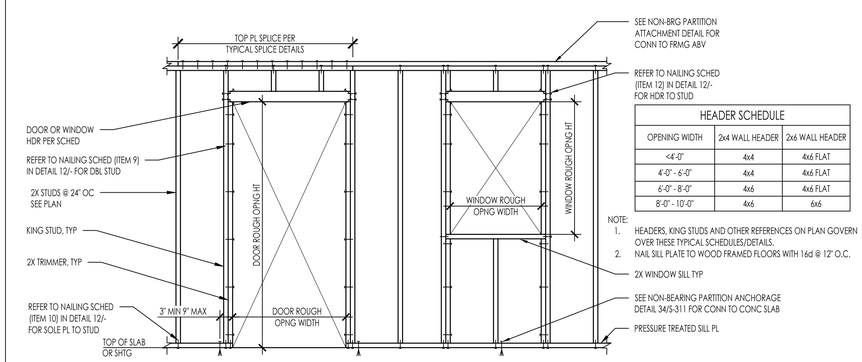

HEADER SCHEDULE

OPENING WIDTH	2x4 WALL HEADER	2x6 WALL HEADER
<4'-0"	4x4	4x6 FLAT
4'-0" - 6'-0"	4x4	4x6 FLAT
6'-0" - 8'-0"	4x6	4x6 FLAT
8'-0" - 10'-0"	4x6	6x6

NOTE:
1. HEADERS, KING STUDS AND OTHER REFERENCES ON PLAN GOVERN OVER THESE TYPICAL SCHEDULES/DETAILS.
2. NAIL SILL PLATE TO WOOD FRAMED FLOORS WITH 16d @ 12" O.C.

INTERIOR NON-BEARING PARTITION WALL FRAMING

2277-01-CU21 - S401 NTS **43**

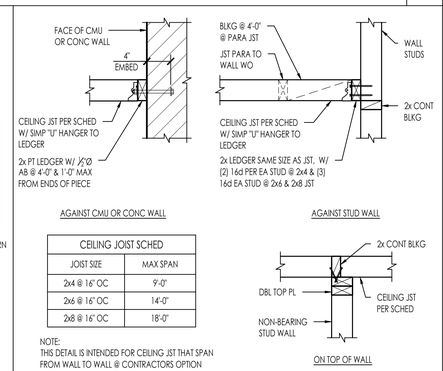

CEILING JOIST SCHED	
JOIST SIZE	MAX SPAN
2x4 @ 16" OC	9'-0"
2x6 @ 16" OC	14'-0"
2x8 @ 16" OC	18'-0"

NOTE:
THIS DETAIL IS INTENDED FOR CEILING JST THAT SPAN FROM WALL TO WALL @ CONTRACTORS OPTION

CEILING JOIST SCHED & DETAILS

2277-01-CU21 - S401 NTS **33**

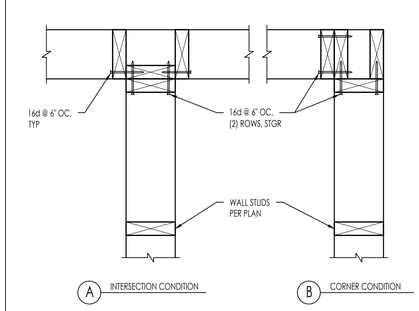

TYPICAL WOOD STUD INTERSECTIONS

2277-01-CU21 - S401 NTS **24**

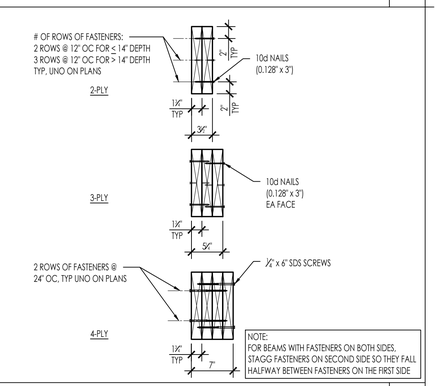

NOTE:
FOR BEAMS WITH FASTENERS ON BOTH SIDES, STAGG FASTENERS ON SECOND SIDE SO THEY FALL HALFWAY BETWEEN FASTENERS ON THE FIRST SIDE

MULTI-PLY MEMBER CONNECTION

2277-01-CU21 - S401 NTS **14**

54 | 44 | 34 | 23 | 13

CARPINTERIA ADU PROTOTYPES
SANTA BARBARA COUNTY, CA

TYPICAL WOOD DETAILS

DATE
05/09/2023

SHEET
S2-401

\\ccorp\rrm\on-site\2200\2277-01-CU21 - Carpinteria-Downtown-Design-Overlay-SB2-Funded\Structural\CorrDocs\Sheet-Files\2277-01-CU21 - S401.dwg, PLAN 12 - S401, May 09, 2023 2:12pm, ALopez

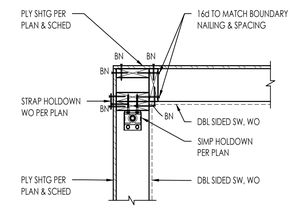

CORNER W/O POST

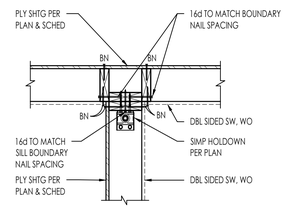

INTERSECTION W/O POST

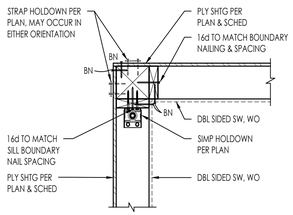

CORNER W/ POST

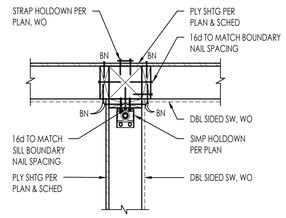

INTERSECTION W/ POST

SHEAR WALL INTERSECTION

2277-01-C1/21 - S402

NTS | 42

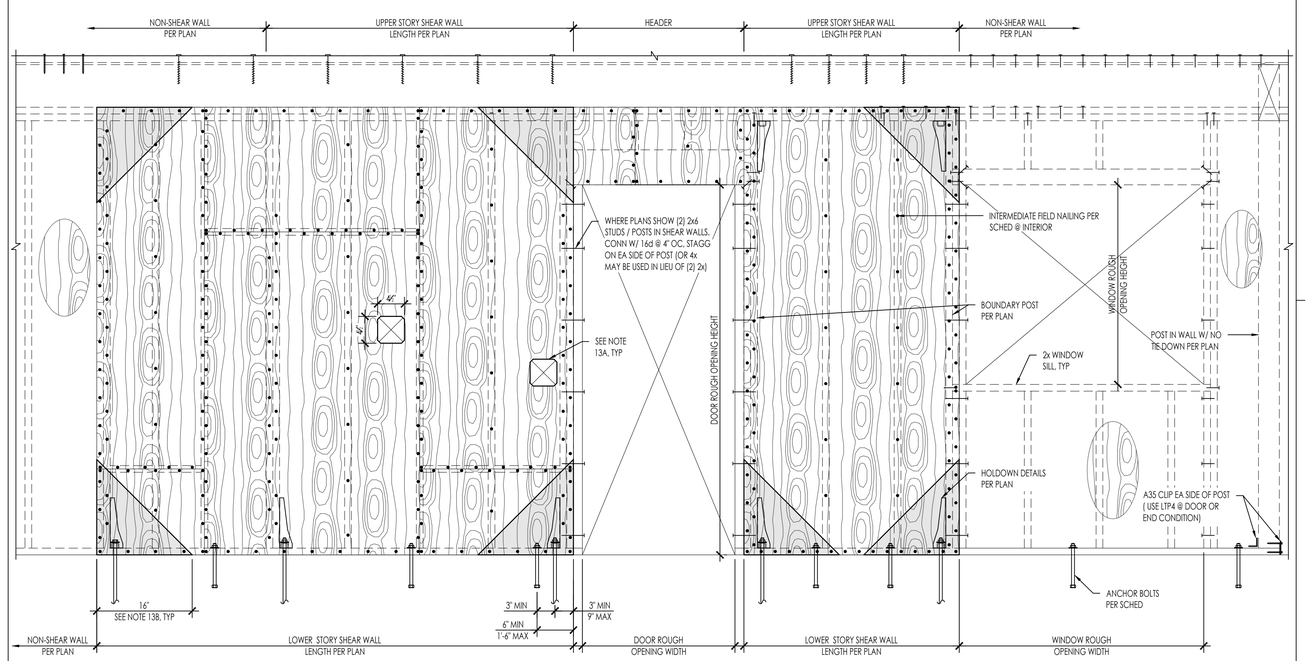

SHEAR WALL SHEATHING / NAILING SCHEDULE									
WALL SYMBOL	STRUCT SHEATHING 1,12	FRAMING SIZE 6	NAILING 2,3,4			SILL NAILING 7		A35s	ANCHOR BOLTING 10, 11
			(2) 2x STUD	EDGE	INTERMEDIATE SUPPORTS	NAILS /LAG SCREWS	SDS SCREWS 14 8 OPTION		
A	15/32" STRUCT 1 PLYWOOD	2x	10d @ 9" OC	8d @ 6" OC	8d @ 12" OC	16d @ 6" OC	12" OC	24" OC	5/8" DIA @ 48" OC
B	15/32" STRUCT 1 PLYWOOD	2x	10d @ 8" OC	10d @ 6" OC	10d @ 12" OC	5/8"Ø LAG SCREWS @ 16" OC	12" OC	16" OC	5/8" DIA @ 48" OC
C	15/32" STRUCT 1 PLYWOOD	2x	10d @ 5" OC	10d @ 4" OC	10d @ 12" OC	5/8"Ø LAG SCREWS @ 16" OC	8" OC	12" OC	5/8" DIA @ 32" OC
D	15/32" STRUCT 1 PLYWOOD	2x	10d @ 4" OC	10d @ 3" OC	10d @ 12" OC	5/8"Ø LAG SCREWS @ 16" OC	6" OC	8" OC	5/8" DIA @ 32" OC
E	15/32" STRUCT 1 PLYWOOD	2x	10d @ 3" OC	10d @ 2" OC	10d @ 12" OC	5/8"Ø LAG SCREWS @ 8" OC	4" OC	8" OC	5/8" DIA @ 24" OC
F	15/32" STRUCT 1 PLYWOOD (EACH FACE OF WALL)	3x	(2) 10d @ 5" OC	10d @ 4" OC	10d @ 12" OC	5/8"Ø LAG SCREWS @ 8" OC	(2) @ 8" OC *	6" OC	5/8" DIA @ 16" OC
G	15/32" STRUCT 1 PLYWOOD (EACH FACE OF WALL)	3x	(2) 10d @ 4" OC	10d @ 3" OC	10d @ 8" OC	5/8"Ø LAG SCREWS @ 8" OC	(2) @ 6" OC *	A34 @ 4" OC	5/8" DIA @ 16" OC
H	15/32" STRUCT 1 PLYWOOD (EACH FACE OF WALL)	3x	(2) 10d @ 3" OC	10d @ 2" OC	10d @ 6" OC	5/8"Ø LAG SCREWS @ 6" OC	(2) @ 4" OC *	LTP4 @ 15 4" OC	5/8" DIA @ 8" OC

NOTES:
1. ALL PLYWOOD SHALL BE 5 PLY MINIMUM WITH A SPAN RATING OF 32/16 AND ALL PANEL EDGES SHALL BE BLOCKED. PROVIDE 1/8" GAP AT ALL PANEL JOINTS.
2. 8d NAIL DEFINED AS 0.131" DIAMETER SHANK x 2 1/2" LONG x 0.281 DIAMETER HEAD. 10d NAIL DEFINED AS 0.148" DIAMETER SHANK x 3" LONG x 0.312 DIAMETER HEAD.
3. PROVIDE E.N. AT ALL END STUDS, STUDS/POSTS WITH HOLDOWNS OR TIE DOWN STRAPS, SILL PLATES AND TOP PLATES.
4. WHERE 10d NAILS ARE 3 INCHES ON CENTER OR LESS, NAILS SHALL BE STAGGERED.
5. NAILS SHALL BE 1/2 INCH MINIMUM FROM PLYWOOD PANEL EDGE AND 3/8 INCH MINIMUM FROM CONNECTING MEMBER EDGE WHERE SHEAR EXCEEDS 300 PLF.
6. USE 3x FRAMING AT BOTTOM SILL PLATES, BLOCKING AND ALL STUDS AT ADJACENT PANEL EDGES WHERE SHEAR EXCEEDS 300 PLF. STRUCTURALLY ACCEPTABLE TO USE (2) 2x INSTEAD OF 3x FRAMING AT BOTTOM SILL PLATES.
7. WHERE SILL SHEAR TRANSFER IS THROUGH LAG SCREWS, SILL PLATE SHALL BE A MINIMUM OF 2 1/2" THICK.
8. LAG SCREWS SHALL BE 6 INCHES LONG AND HOLES ARE TO BE PRE-DRILLED AS TO NOT SPLIT BLOCKING/RIM.
9. SEE ELEVATION ABOVE FOR TYPICAL CONSTRUCTION.
10. REFER TO PLATE WASHER DETAIL FOR REQUIREMENTS
11. LENGTHEN ANCHOR BOLTS AS REQUIRED FOR EMBEDMENT AND SILL PLATE THICKNESS.
12. ORIENTED STRAND BOARD (OSB) MAY BE SUBSTITUTED FOR PLYWOOD NOTED ABOVE PROVIDED IT IS RATED BY APA'S PERFORMANCE STANDARD RATING AND IS OF THE SAME NUMBER OF LAYERS AS PLYWOOD PLY INDICATED.
13. LIMITATIONS OF MECHANICAL PENETRATIONS IN SHEAR WALLS:
    A. 4 1/2" MAX PENETRATION
    B. NO CUTS OR HOLES IN SHEATHING WITHIN 16" OF CORNERS, SQUARE PENETRATIONS SHALL RADIUS EDGES. DO NOT OVER CUT HOLE WITH SAW
14. ASSUMES A 1 1/4" MIN LSL RIM BOARD. FASTENER EDGE DIST IS 5/8" MIN & 6" END DISTANCE MIN. 2" MIN PENETRATION INTO RIM BOARD.
    * WALL W/ DOUBLE SIDED PLYWOOD REQUIRE (2) RIM BOARDS.
15. SIMPSON LTP4 CLIP SHALL BE INSTALLED IN A HORIZONTAL ORIENTATION. IF CLIP IS INSTALLED OVER THE SHEATHING, O.131" x 2 1/2" NAILS SHALL BE USED.

TYPICAL SHEAR WALL ELEVATION AND SCHEDULE

2277-01-C1/21 - S402

NTS | 13

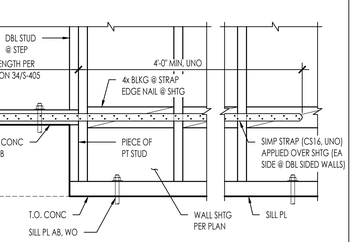

STRAP AT STEP IN SHEAR WALL SILL PLATE

2277-01-C1/21 - S402

NTS | 53

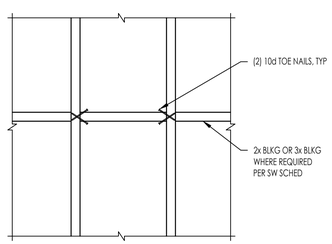

ELEVATION

TYPICAL BLOCKING DETAIL

2277-01-C1/21 - S402

NTS | 43

MARK	# OF BLKG	SIMPSON STRAP	NAILS EA SIDE OF OPENING	STRAP LENGTH (IN)	ALLOWABLE TENSION LOADS (LBS)
V	1	CS20	(12) 10d x 2½"	32[1]	1,030
V	1	CS16	(20) 10d x 2½"		1,705
V	1	CS14	(26) 10d x 2½"		2,490
V	2	CMSTC16	(50) 10d x 3¼"		4,690
V	2	CMST14	(66) 10d x 2½"		6,475
V	2	CMST12	(86) 10d x 2½"	39	9,215

NOTES:
1. 2 BAYS OR 32" MIN STRAP LENGTH
2. BOUNDARY AND EDGE NAILING FROM PLYWOOD TO STUDS / FRAMING SHALL OCCUR ABOVE AND BELOW OPENINGS AT THIS CONDITION
3. SEE TYPICAL SHEAR WALL ELEVATION FOR BALANCE OF INFO NOT SHOWN

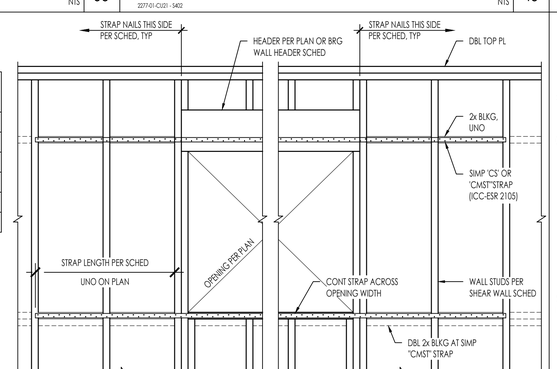

FORCE TRANSFER AROUND OPENINGS

2277-01-C1/21 - S402

NTS | 44

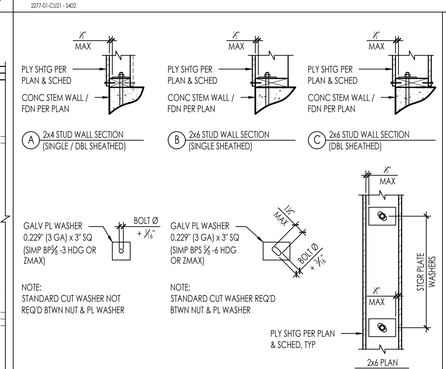

PLATE WASHER DETAIL

2277-01-C1/21 - S402

NTS | 34

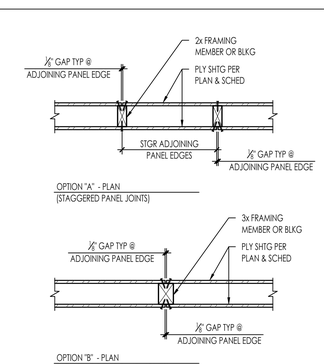

DOUBLE SIDED SHEAR WALL

2277-01-C1/21 - S402

NTS | 24

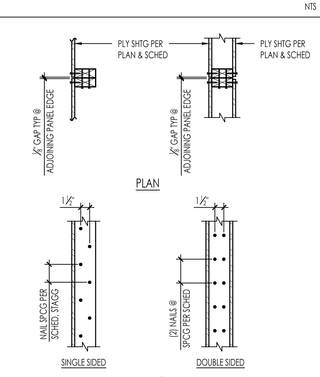

2x STUD NAILING @ ADJOINING PANEL EDGES

2277-01-C1/21 - S402

NTS | 14

These plans are only to be used within City of Carpinteria jurisdiction. By using these standard plans ("ADU Plans") in accordance with the City of Carpinteria's Pre-Approved ADU Construction Plans Program, the User agrees to defend, indemnify, and hold harmless the City of Carpinteria and RRM from any and all claims, liabilities, suits, and demands on account of any injury, damage, or loss to persons or property, including injury or death, or economic losses, arising out of the use of these ADU Plans. The use of these ADU Plans does not eliminate or reduce the user's responsibility to verify any and all information herein.

CARPINTERIA ADU PROTOTYPES

SANTA BARBARA COUNTY, CA

TYPICAL WOOD DETAILS

DATE
05/09/2023

SHEET
S2-402

\\corp\rrm\on-site\2200\2277-01-C1/21-Carpinteria-Downtown-Design-Overlay-SB2-Funded\Structural\CorDocs\Sheet-Files\2277-01-C1/21 - S402.dwg, PLAN 12 - S402, May 09, 2023 2:12pm, ALopez

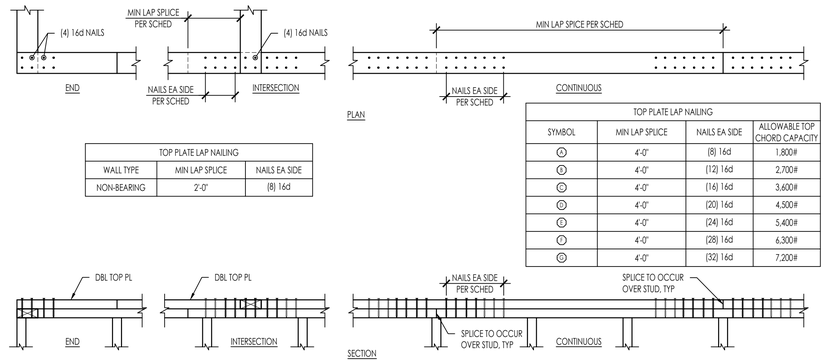

TOP PLATE LAP NAILING		
WALL TYPE	MIN LAP SPLICE	NAILS EA SIDE
NON-BEARING	2'-0"	(8) 16d

TOP PLATE LAP NAILING			
SYMBOL	MIN LAP SPLICE	NAILS EA SIDE	ALLOWABLE TOP CHORD CAPACITY
A	4'-0"	(8) 16d	1,800#
B	4'-0"	(12) 16d	2,700#
C	4'-0"	(16) 16d	3,600#
D	4'-0"	(20) 16d	4,500#
E	4'-0"	(24) 16d	5,400#
F	4'-0"	(28) 16d	6,300#
G	4'-0"	(32) 16d	7,200#

51 DBL TOP PLATE SPLICE NAILING NTS 32

2277-01-CU21 - S403

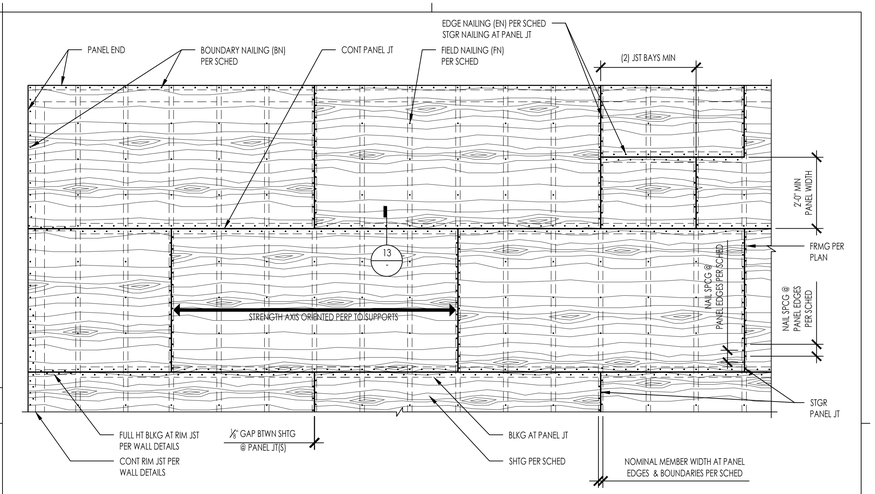

DIAPHRAGM SCHEDULE												
TYPE	LOCATION	SHEATHING THICKNESS	SHEATHING GRADE [6]	SPAN RATING	BLOCKING	NAILS	BOUNDARY NAILING (BN)	EDGE NAILING AT CONT. PANEL EDGES (EN)	EDGE NAILING AT OTHER PANEL EDGES (EN)	FIELD NAILING (FN)	PANEL EDGE SUPPORT OR NOMINAL MEMBER WIDTH AT PANEL EDGES	LINES OF FASTENERS
A	ROOF	SEE NOTE 5	SHEATHING	32 / 16	NO	10d	6	-	6	12	H-CLIPS	1

NOTES:
1. DIAPHRAGM SHALL BE GLUED TO FLOOR FRAMING PRIOR TO NAILING, REFER TO PROJECT GENERAL NOTES.
2. MINIMUM EDGE DISTANCE FOR NAILS SHALL BE 3/8" FROM SHEATHING EDGE AND 3/8" FROM LUMBER EDGE.
3. NAILS SHALL BE DRIVEN TIGHT TO TOP OF PLYWOOD SURFACE AND SHALL NOT PENETRATE THE TOP OF PLYWOOD MORE THAN COMMONLY EXPECTED WITH HAMMER DRIVEN NAILS.
4. WHERE H-CLIPS ARE SPECIFIED, THEY SHOULD BE INSTALLED AS FOLLOWS:
   A. ONE H-CLIP SHALL BE PLACED BETWEEN ABUTTING PANELS AT A LOCATION MIDWAY BETWEEN EACH PAIR OF TRUSSES, RAFTERS OR JOISTS. HOWEVER, (2) H-CLIPS ARE REQUIRED BETWEEN SUPPORTS WHEN SPACED 48 INCHES ON CENTER
   B. USE THE SAME SIZE PANEL EDGE CLIP AS THE PANEL THICKNESS. H-CLIPS MUST FIT SNUGLY
   C. ABUTTING WOOD STRUCTURAL PANELS BE FITTED AS CLOSELY AS CLIPS PERMIT. OCCASIONAL MISFIT OF ABUTTING SHEETS MAY BE TOLERATED PROVIDING THAT GAPS DO NOT EXCEED MAXIMUM OPENING OF 1/8".
5. ROOF SHEATHING THICKNESS SHALL BE INSTALLED AS FOLLOWS:
   A. 15/32 @ SINGLE PLY OR ASPHALT SHINGLES
   B. 19/32 @ TILE
   C. 23/32 @ TILE WITH MORTAR
6. STRUCTURALLY ACCEPTABLE TO USE "SHEATHING" SHEATHING GRADE @ FLOOR LOCATIONS WITHOUT GYPCRETE TOPPING

52 42 32 PLYWOOD DIAPHRAGM SHEATHING NTS 12

2277-01-CU21 - S403

These plans are only to be used within City of Carpinteria jurisdiction. By using these standard plans ("ADU Plans") in accordance with the City of Carpinteria's Pre-Approved ADU Construction Plans Program, the User agrees to defend, indemnify, and hold harmless the City of Carpinteria and RRM from any and all claims, liabilities, suits, and demands on account of any injury, damage, or loss to persons or property, including injury or death, or economic losses, arising out of the use of these ADU Plans. The use of these ADU Plans does not eliminate or reduce the user's responsibility to verify any and all information herein.

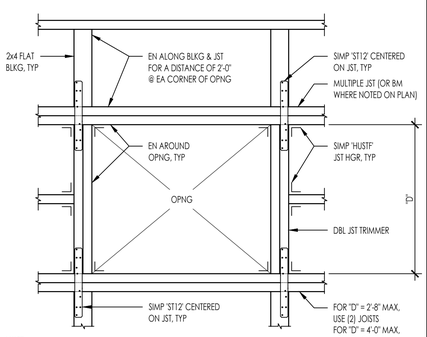

NOTE:
FOR LARGER OPENINGS REFER TO FRAMING PLAN

53 43 33 OPENING AT FRAMING NTS 23

2277-01-CU21 - S403

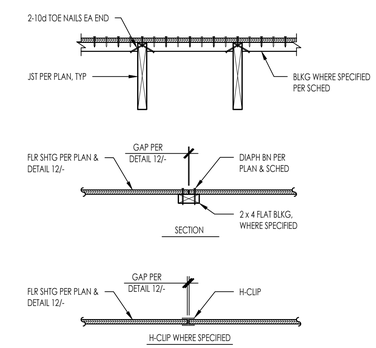

DIAPHRAGM PANEL JOINTS NTS 13

2277-01-CU21 - S403

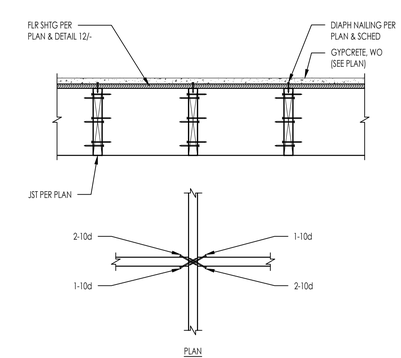

54 44 34 24 TYP JOIST BLOCKING NTS 14

2277-01-CU21 - S403

CARPINTERIA ADU PROTOTYPES

SANTA BARBARA COUNTY, CA

TYPICAL WOOD DETAILS

DATE
05/09/2023

SHEET
S2-403

\\corp\rrm\on-site\2200\2277-01-CU21-Carpinteria-Downtown-Design-Overlay-SB2-Funded\Structural\ConDocs\Sheet-Files\2277-01-CU21 - S403.dwg, PLAN 12 - S403, May 09, 2023 2:12pm, ALopez

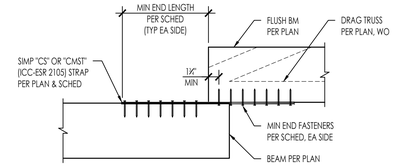

STRAP MODEL	END FASTENERS	END LENGTH (IN)	ALLOWABLE TENSION LOADS (lbs)
CS16	(20) 10d	11	1,705
	(22) 8d	13	
CS14	(26) 10d	15	2,490
	(30) 8d	16	

51 | 41 | 31

DRAG STRAP AT BEAM-TO-WALL

2277-01-CU21 - S404

NTS

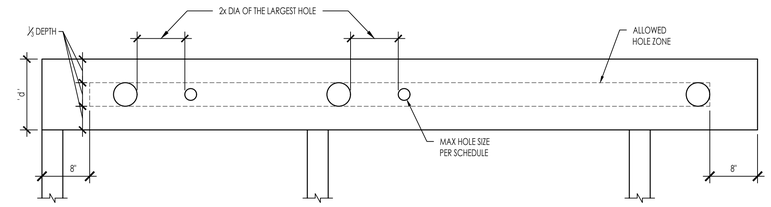

1.55E LSL BEAMS & HEADERS	
HEADER OR BEAM DEPTH	MAX ROUND HOLE SIZE
9 7/16"	3"
11 7/8"	3 3/8"
14" - 16"	4 3/8"

1.55E LSL NOTES:
1. ALLOWED HOLE ZONE SUITABLE FOR HEADERS AND BEAMS WITH UNIFORM AND/OR CONCENTRATED LOADS ANYWHERE ALONG THE MEMBER.
2. ROUND HOLES ONLY.
3. NO HOLES IN HEAERS OR BEAMS IN PLANK ORIENTATION.

(A) 1.55E LSL HEADERS & BEAMS

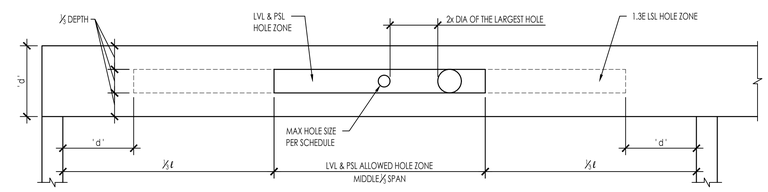

LVL, PSL, & 1.3E LSL BEAMS & HEADERS	
HEADER OR BEAM DEPTH	MAX ROUND HOLE SIZE
4 3/8"	1"
5 1/2"	1 3/4"
7 1/4" - 20"	2"

LVL/PSL/1.3E LSL:
1. ALLOWED HOLE ZONE SUITABLE FOR HEADERS AND BEAMS WITH UNIFORM LOADS ONLY.
2. ROUND HOLES ONLY.
3. NO HOLES IN CANTILEVERS.
4. NO HOLES IN HEADERS OR BEAMS IN PLANK ORIENTATION.

(B) LVL, PSL, & 1.3E LSL HEADERS & BEAMS

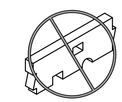

DO NOT CUT, NOTCH, OR DRILL HOLES IN HEADERS OR BEAMS EXCEPT AS INDICATED IN THE ILLUSTRATIONS AND TABLES

52 | 42 | 32

ALLOWABLE HOLES THRU ENGINEERED LUMBER HEADERS & BEAMS

2277-01-CU21 - S404

NTS

12

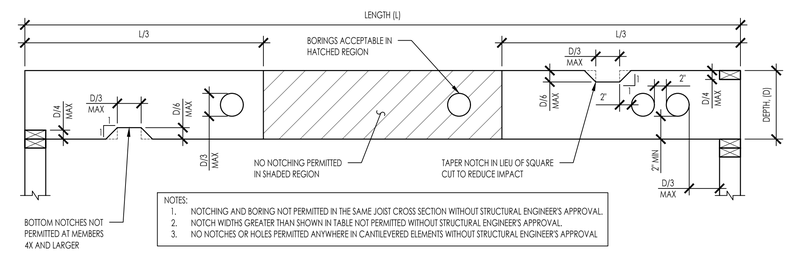

NOTES:
1. NOTCHING AND BORING NOT PERMITTED IN THE SAME JOIST CROSS SECTION WITHOUT STRUCTURAL ENGINEER'S APPROVAL.
2. NOTCH WIDTHS GREATER THAN SHOWN IN TABLE NOT PERMITTED WITHOUT STRUCTURAL ENGINEER'S APPROVAL.
3. NO NOTCHES OR HOLES PERMITTED ANYWHERE IN CANTILEVERED ELEMENTS WITHOUT STRUCTURAL ENGINEER'S APPROVAL

NOTCH AND HOLE LIMITATIONS				
JOIST SIZE	MAX HOLE	MAX NOTCH DEPTH	MAX END NOTCH	MAX NOTCH LENGTH
2X4	NONE	NONE	NONE	NONE
2X6	1 1/2"	7/8"	1 7/8"	1 1/2"
2X8	2 3/8"	1 1/4"	1 7/8"	2 3/8"
2X10	3"	1 1/2"	2 3/8"	3"
2X12	3 3/4"	1 7/8"	2 7/8"	3 3/4"

53 | 43 | 33

SAWN LUMBER AND RAFTER JOIST NOTCHING AND BORING LIMITATIONS

2277-01-CU21 - S404

NTS

13

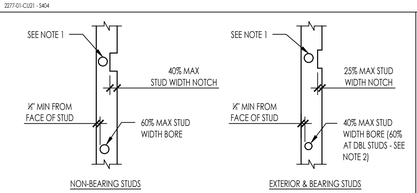

MAXIMUM BORED HOLE DIAMETER/NOTCH DEPTH			
STUD SIZE (IN)	APPLICATION	MAX HOLE DIAMETER (IN)	MAX NOTCH DEPTH (IN)
2X4	NON-BEARING	2 1/8"	1 3/8"
	EXTERIOR/BEARING	1 3/8"	7/8"
2X6	NON-BEARING	3 3/4"	2 3/16"
	EXTERIOR/BEARING	2 3/16"	1 3/8"

NOTES:
1. NOTCHING AND BORING NOT PERMITTED IN THE SAME STUD SECTION.
2. NO MORE THAN 2 SUCCESSIVE DBL. STUDS ARE PERMITTED TO HAVE 60% MAX BORED HOLES.

54 | 44 | 34

TYP WALL NOTCH AND BORING LIMITATIONS

2277-01-CU21 - S404

NTS

24

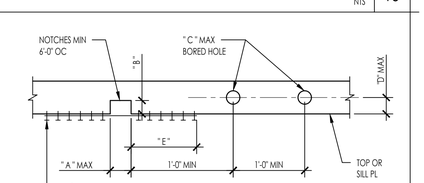

NOTCH AND HOLE LIMITATIONS						
TOP PL OR SILL PL	A	B	C	D	E	F
2X4	3 1/2"	1 1/2"	1 1/4"	1 1/2"	5 3/4"	6
2X6	5 1/2"	2 1/4"	2 1/4"	2 1/2"	8 1/4"	9
2X8	5 1/2"	3"	3 1/4"	3 1/2"	12 1/4"	12

TOP PL AND SILL NOTCH AND BORING LIMITATIONS

2277-01-CU21 - S404

NTS

14

These plans are only to be used within City of Carpinteria jurisdiction. By using these standard plans ("ADU Plans") in accordance with the City of Carpinteria's Pre-Approved ADU Construction Plans Program, the User agrees to defend, indemnify, and hold harmless the City of Carpinteria and RRM from any and all claims, liabilities, suits, and demands on account of any injury, damage, or loss to persons or property, including injury or death, or economic losses, arising out of the use of these ADU Plans. The use of these ADU Plans does not eliminate or reduce the user's responsibility to verify any and all information herein.

CARPINTERIA ADU PROTOTYPES

SANTA BARBARA COUNTY, CA

TYPICAL WOOD DETAILS

DATE
05/09/2023

SHEET
S2-404

\\corp\rrm\on-site\2200\2277-01-CU21-Carpinteria-Downtown-Design-Overlay-SB2-Funded\Structural\ConDocs\Sheet-Files\2277-01-CU21 - S404.dwg, PLAN 12 - S404, May 09, 2023 - 2:12pm, ALopez

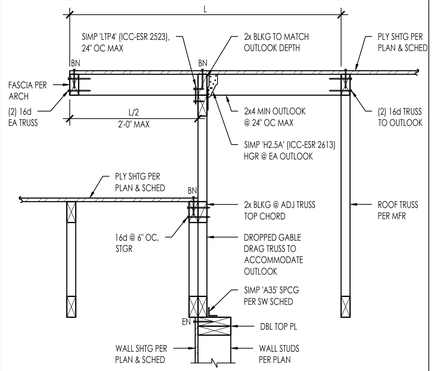

DIAPH TRANSITION W/ OVERHANG 51
2277-01-C1/21 - S421 1" = 1'-0"

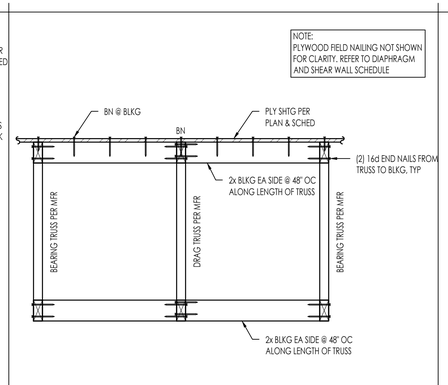

INTERIOR DRAG TRUSS 41
2277-01-C1/21 - S421 1" = 1'-0"

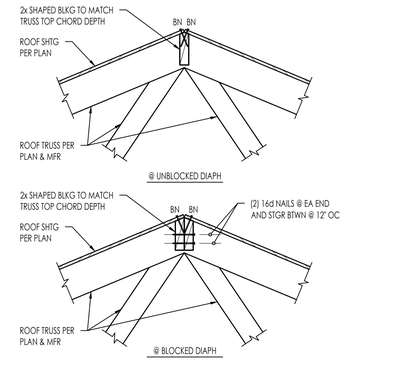

SHEATHING OVER ROOF RIDGE 32
2277-01-C1/21 - S421 1" = 1'-0"

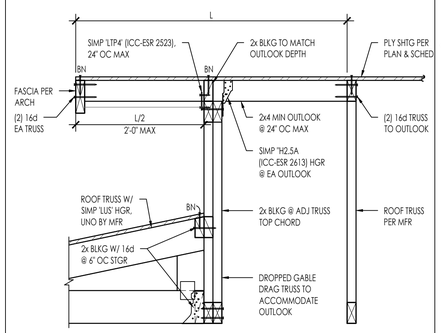

DIAPH TRANSITION W/ OVERHANG 52
2277-01-C1/21 - S421 1" = 1'-0"

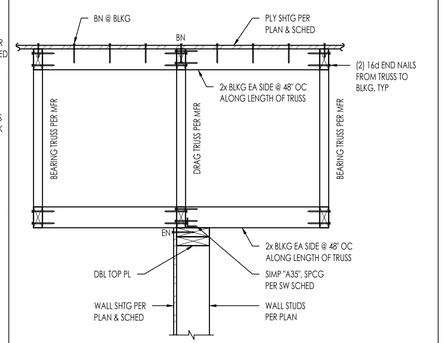

INTERIOR SHEAR WALL (ROOF TRUSS PARALLEL) 42
2277-01-C1/21 - S421 1" = 1'-0"

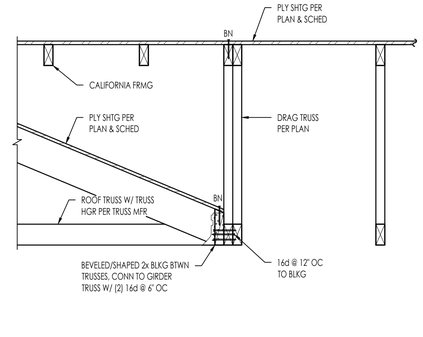

TRUSS TO GIRDER TRUSS 32
2277-01-C1/21 - S421 1" = 1'-0"

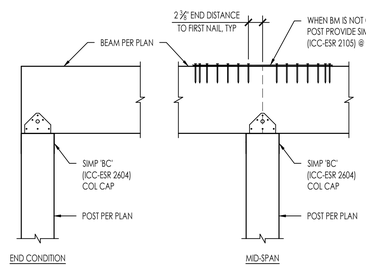

BEAM TO POST CONNECTION
2277-01-C1/21 - S421 1" = 1'-0"
53

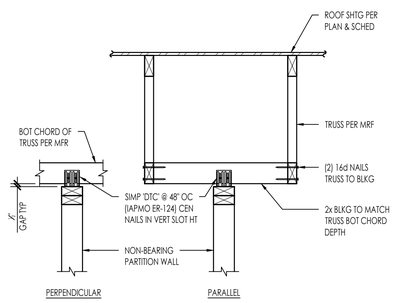

TRUSS OVER NON-BEARING PARTITION 43
2277-01-C1/21 - S421 1" = 1'-0"

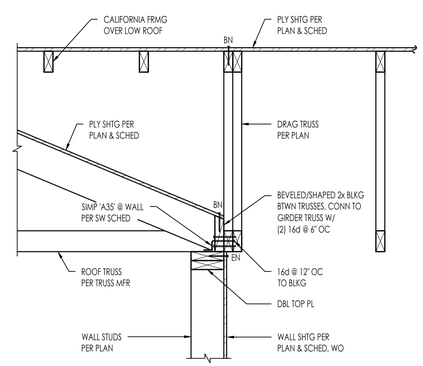

TRUSS TO GIRDER TRUSS W/ WALL BELOW 33
2277-01-C1/21 - S421 1" = 1'-0"

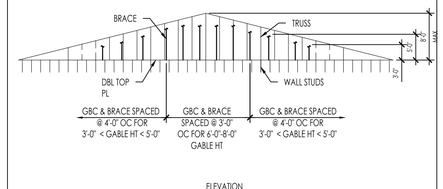

ELEVATION

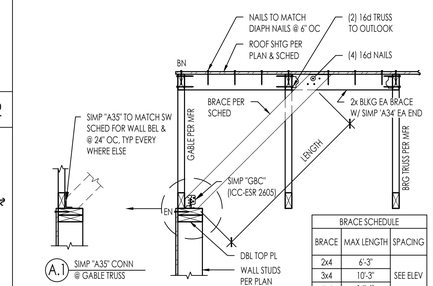

BRACE SCHEDULE		
BRACE	MAX LENGTH	SPACING
2x4	6'-5"	
3x4	10'-3"	SEE ELEV
4x4	14'-6"	

A GABLE END TRUSS W/O LOOKOUT

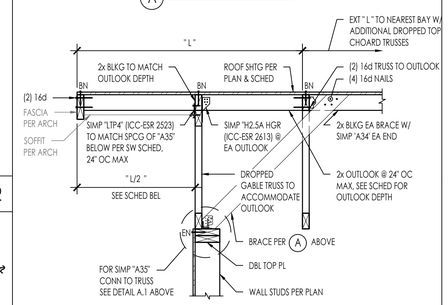

B GABLE END TRUSS W/ LOOKOUT

OUTLOOK DEPTH SCHEDULE		
ROOFING	DEPTH	L/2
SINGLE PLY OR ASPHALT SHINGLES	2x4	2'-0"
	2x6	4'-0"
ALL OTHERS	2x4	2'-0"
	2x6	3'-0"

NOTE: "L/2" ASSUMES NO STUCCO @ UNDERSIDE OF EAVE IF "L/2" > 2'-0", ADDITIONAL TRUSS TOP CHORDS SHALL BE DROPPED, EXTEND TO NEAREST FULL BAY

GABLE END TRUSS
2277-01-C1/21 - S421 NTS
23

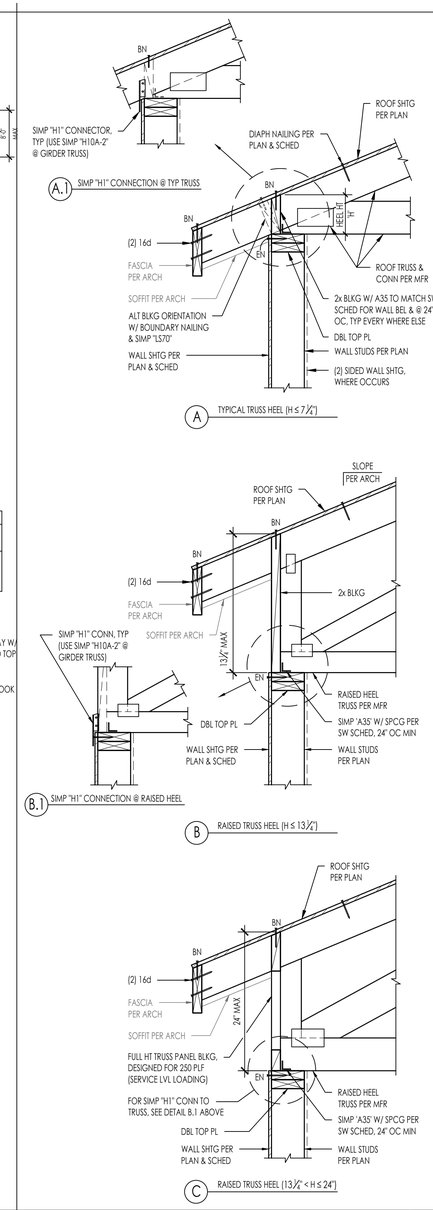

ROOF TRUSS PERP TO EXTERIOR WALL
2277-01-C1/21 - S421 NTS
13

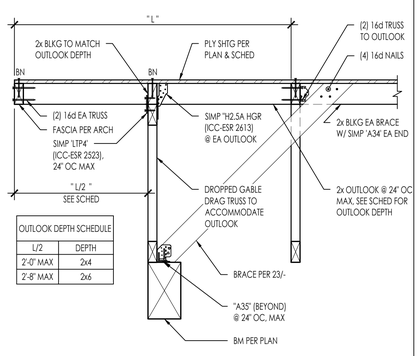

OUTLOOK DEPTH SCHEDULE	
L/2	DEPTH
2'-0" MAX	2x4
2'-8" MAX	2x6

GABLE END TRUSS W/ LOOKOUT @ BEAM
2277-01-C1/21 - S421 1" = 1'-0"
54

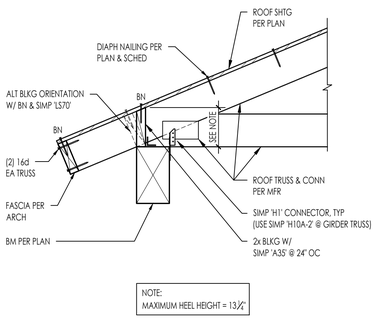

NOTE:
MAXIMUM HEEL HEIGHT = 13 1/2"

ROOF TRUSS PERP TO BEAM
2277-01-C1/21 - S421 1" = 1'-0"
44

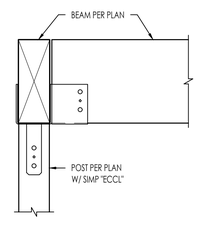

POST TO BEAM CONNECTION W/ BOLTS
2131-01-C1/20 - S422 - 33 NTS
34

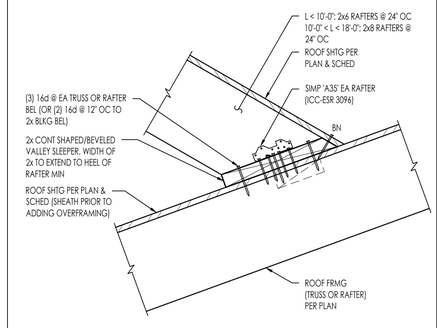

CALIFORNIA FRAMING SLEEPER
2277-01-C1/21 - S421 NTS
24

14

These plans are only to be used within City of Carpinteria jurisdiction. By using these standard plans ("ADU Plans") in accordance with the City of Carpinteria's Pre-Approved ADU Construction Plans Program, the User agrees to defend, indemnify, and hold harmless the City of Carpinteria and RRM from any and all claims, liabilities, suits, and demands on account of any injury, damage, or loss to persons or property, including injury or death, or economic losses, arising out of the use of these ADU Plans. The use of these ADU Plans does not eliminate or reduce the user's responsibility to verify any and all information herein.

CARPINTERIA ADU PROTOTYPES

SANTA BARBARA COUNTY, CA

ROOF FRAMING DETAILS

DATE
05/09/2023

SHEET
S2-421

\\corp\vrm\on-site\2000\2277-01-C1/21-Carpinteria-Downtown-Design-Overlay-SB2-Funded\Structural\CorDocs\Sheet-Files\2277-01-C1/21 - S421.dwg, PLAN 2 - S421, May 09, 2023 2:12pm, ALopez

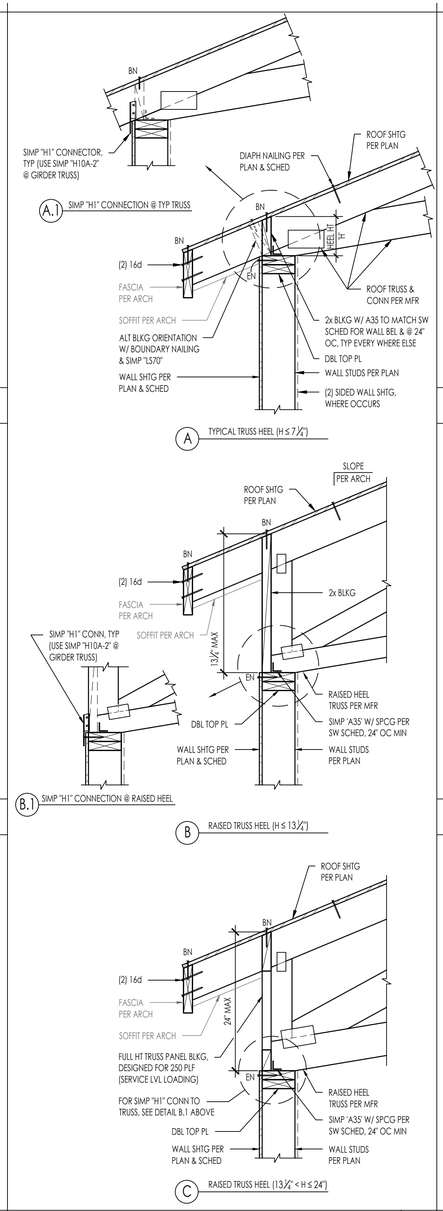

ROOF TRUSS PERP TO EXTERIOR WALL
2277-01-CU21 - S422 - 23
NTS

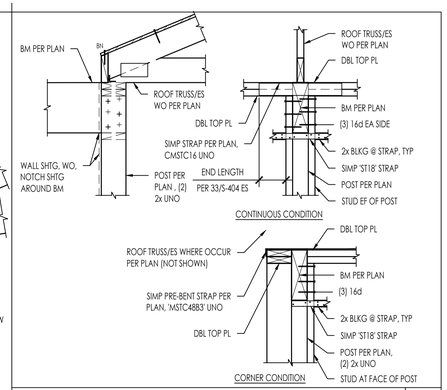

BEAM POCKET THROUGH EXTERIOR WALL
2277-01-CU21 - S422 - 11
NTS or 3/4" = 1'-0"

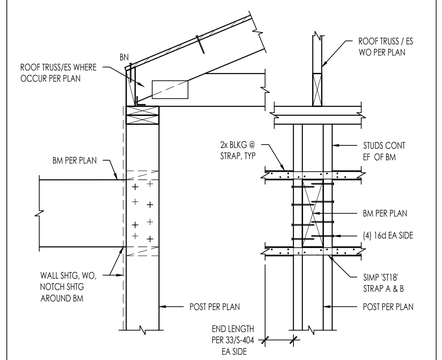

BEAM POCKET THROUGH EXTERIOR WALL
2277-01-CU21 - S422 - 12
NTS

	51		41		31				11		
	52		42		32				12		
	53		43		33		23		13		
	54		44		34		24		14		

These plans are only to be used within City of Carpinteria jurisdiction. By using these standard plans ("ADU Plans") in accordance with the City of Carpinteria's Pre-Approved ADU Construction Plans Program, the User agrees to defend, indemnify, and hold harmless the City of Carpinteria and RRM from any and all claims, liabilities, suits, and demands on account of any injury, damage, or loss to persons or property, including injury or death, or economic losses, arising out of the use of these ADU Plans. The use of these ADU Plans does not eliminate or reduce the user's responsibility to verify any and all information herein.

CARPINTERIA ADU PROTOTYPES

SANTA BARBARA COUNTY, CA

ROOF FRAMING DETAILS

DATE
05/09/2023

SHEET
S2-422

\\corp.vrm\on-site\2000\2277-01-CU21-Carpinteria-Downtown-Design-Overlay-S82-Funded\Structural\CadDocs\Sheet-Files\2277-01-CU21 - S422.dwg, PLAN 2 - S422, May 09, 2023 2:12pm, ALopez

BUILDING ENERGY ANALYSIS REPORT

PROJECT:
Carpenteria ADU (Plan 1)
Carpenteria , CA

Project Designer:
RRM Design Group
3765 South Higuera St Ste 102
San Luis Obispo, CA 93401

Report Prepared by:
Timothy Carstairs, CEA, HERS, GPR
Carstairs Energy Inc.
2238 Bayview Heights Drive, Suite E
Los Osos, CA 93402
805-904-9048

Job Number:
23-011314

Date:
1/17/2023

The EnergyPro computer program has been used to perform the calculations summarized in this compliance report. This program has approval and is authorized by the California Energy Commission for use with both the Residential and Nonresidential 2019 Building Energy Efficiency Standards.

This program developed by EnergySoft Software – www.energysoft.com.

TABLE OF CONTENTS

Cover Page 1
Table of Contents 2
Form CF1R-PRF-01-E Certificate of Compliance 3
Form RMS-1 Residential Measures Summary 15
Form MF1R Mandatory Measures Summary 16
Room Load Summary 21

Project Name: Carpenteria ADU (Plan 1) **Calculation Date/Time:** 2023-01-13T11:55:49-08:00 **(Page 1 of 12)**
Calculation Description: Title 24 Analysis **Input File Name:** Carpenteria ADU (Plan 1).ribd22x

GENERAL INFORMATION					
01	Project Name	Carpenteria ADU (Plan 1)			
02	Run Title	Title 24 Analysis			
03	Project Location	,			
04	City	Carpenteria	05	Standards Version	2022
06	Zip code		07	Software Version	EnergyPro 9.0
08	Climate Zone	6	09	Front Orientation (deg/ Cardinal)	All orientations
10	Building Type	Single family	11	Number of Dwelling Units	1
12	Project Scope	Newly Constructed	13	Number of Bedrooms	1
14	Addition Cond. Floor Area (ft^2)	0	15	Number of Stories	1
16	Existing Cond. Floor Area (ft^2)	n/a	17	Fenestration Average U-factor	0.3
18	Total Cond. Floor Area (ft^2)	400	19	Glazing Percentage (%)	16.30%
20	ADU Bedroom Count	n/a			

COMPLIANCE RESULTS	
01	Building Complies with Computer Performance
02	This building incorporates features that require field testing and/or verification by a certified HERS rater under the supervision of a CEC-approved HERS provider.
03	This building incorporates one or more Special Features shown below

Project Name: Carpenteria ADU (Plan 1) **Calculation Date/Time:** 2023-01-13T11:55:49-08:00 **(Page 2 of 12)**
Calculation Description: Title 24 Analysis **Input File Name:** Carpenteria ADU (Plan 1).ribd22x

ENERGY DESIGN RATINGS	Energy Design Ratings			Compliance Margins		
	Source Energy (EDR1)	Efficiency[1] EDR (EDR2efficiency)	Total[2] EDR (EDR2total)	Source Energy (EDR1)	Efficiency[1] EDR (EDR2efficiency)	Total[2] EDR (EDR2total)
Standard Design	30.5	30.7	32.3			
Proposed Design						
North Facing	28.7	22.3	28.2	1.8	8.4	4.1
East Facing	28.8	22.9	28.5	1.7	7.8	3.8
South Facing	28.7	22.6	28.3	1.8	8.1	4
West Facing	28.9	23.1	28.5	1.6	7.6	3.8
RESULT[3]: PASS						

[1]Efficiency EDR includes improvements like a better building envelope and more efficient equipment
[2]Total EDR includes efficiency and demand response measures such as photovoltaic (PV) system and batteries
[3]Building complies when source energy, efficiency and total compliance margins are greater than or equal to zero and unmet load hour limits are not exceeded

- Standard Design PV Capacity: 1.55 kWdc
- Proposed PV Capacity Scaling: North (1.55 kWdc) East (1.55 kWdc) South (1.55 kWdc) West (1.55 kWdc)

Project Name: Carpenteria ADU (Plan 1) **Calculation Date/Time:** 2023-01-13T11:55:49-08:00 **(Page 3 of 12)**
Calculation Description: Title 24 Analysis **Input File Name:** Carpenteria ADU (Plan 1).ribd22x

ENERGY USE SUMMARY						
Energy Use	Standard Design Source Energy (EDR1) (kBtu/ft^2 -yr)	Standard Design TDV Energy (EDR2) (kTDV/ft^2 -yr)	Proposed Design Source Energy (EDR1) (kBtu/ft^2 -yr)	Proposed Design TDV Energy (EDR2) (kTDV/ft^2 -yr)	Compliance Margin (EDR1)	Compliance Margin (EDR2)
Space Heating	0.02	0.11	0.68	5.16	-0.66	-5.05
Space Cooling	1.31	33.46	0.47	15.45	0.84	18.01
IAQ Ventilation	0.52	5.55	0.52	5.55	0	0
Water Heating	4.02	45.11	3.02	35.05	1	10.06
Self Utilization/Flexibility Credit				0		0
North Facing Efficiency Compliance Total	**5.87**	**84.23**	**4.69**	**61.21**	**1.18**	**23.02**
Space Heating	0.02	0.11	0.66	5.02	-0.64	-4.91
Space Cooling	1.31	33.46	0.56	17.32	0.75	16.14
IAQ Ventilation	0.52	5.55	0.52	5.55	0	0
Water Heating	4.02	45.11	3.01	34.97	1.01	10.14
Self Utilization/Flexibility Credit				0		0
East Facing Efficiency Compliance Total	**5.87**	**84.23**	**4.75**	**62.86**	**1.12**	**21.37**

Project Name: Carpenteria ADU (Plan 1) **Calculation Date/Time:** 2023-01-13T11:55:49-08:00 **(Page 4 of 12)**
Calculation Description: Title 24 Analysis **Input File Name:** Carpenteria ADU (Plan 1).ribd22x

ENERGY USE SUMMARY						
Energy Use	Standard Design Source Energy (EDR1) (kBtu/ft^2 -yr)	Standard Design TDV Energy (EDR2) (kTDV/ft^2 -yr)	Proposed Design Source Energy (EDR1) (kBtu/ft^2 -yr)	Proposed Design TDV Energy (EDR2) (kTDV/ft^2 -yr)	Compliance Margin (EDR1)	Compliance Margin (EDR2)
Space Heating	0.02	0.11	0.66	5.05	-0.64	-4.94
Space Cooling	1.31	33.46	0.51	16.22	0.8	17.24
IAQ Ventilation	0.52	5.55	0.52	5.55	0	0
Water Heating	4.02	45.11	3.01	35.02	1.01	10.09
Self Utilization/Flexibility Credit				0		0
South Facing Efficiency Compliance Total	**5.87**	**84.23**	**4.7**	**61.84**	**1.17**	**22.39**
Space Heating	0.02	0.11	0.73	5.57	-0.71	-5.46
Space Cooling	1.31	33.46	0.56	17.04	0.75	16.42
IAQ Ventilation	0.52	5.55	0.52	5.55	0	0
Water Heating	4.02	45.11	3.02	35.05	1	10.06
Self Utilization/Flexibility Credit				0		0
West Facing Efficiency Compliance Total	**5.87**	**84.23**	**4.83**	**63.21**	**1.04**	**21.02**

Project Name: Carpenteria ADU (Plan 1) **Calculation Date/Time:** 2023-01-13T11:55:49-08:00 **(Page 5 of 12)**
Calculation Description: Title 24 Analysis **Input File Name:** Carpenteria ADU (Plan 1).ribd22x

ENERGY USE INTENSITY	Standard Design (kBtu/ft^2 - yr)	Proposed Design (kBtu/ft^2 - yr)	Compliance Margin (kBtu/ft^2 - yr)	Margin Percentage
North Facing				
Gross EUI[1]	35.59	33.05	2.54	7.14
Net EUI[2]	13.26	10.71	2.55	19.23
East Facing				
Gross EUI[1]	35.59	33.23	2.36	6.63
Net EUI[2]	13.26	10.9	2.36	17.8
South Facing				
Gross EUI[1]	35.59	33.1	2.49	7
Net EUI[2]	13.26	10.76	2.5	18.85
West Facing				
Gross EUI[1]	35.59	33.24	2.35	6.6
Net EUI[2]	13.26	10.91	2.35	17.72

Notes
1. Gross EUI is Energy Use Total (not including PV) / Total Building Area.
2. Net EUI is Energy Use Total (including PV) / Total Building Area.

Project Name: Carpenteria ADU (Plan 1) **Calculation Date/Time:** 2023-01-13T11:55:49-08:00 **(Page 6 of 12)**
Calculation Description: Title 24 Analysis **Input File Name:** Carpenteria ADU (Plan 1).ribd22x

REQUIRED PV SYSTEMS

01	02	03	04	05	06	07	08	09	10	11	12
DC System Size (kWdc)	Exception	Module Type	Array Type	Power Electronics	CFI	Azimuth (deg)	Tilt Input	Array Angle (deg)	Tilt: (x in 12)	Inverter Eff. (%)	Annual Solar Access (%)
1.55	NA	Standard (14-17%)	Fixed	none	true	150-270	n/a	n/a	<=7:12	96	98

REQUIRED SPECIAL FEATURES

The following are features that must be installed as condition for meeting the modeled energy performance for this computer analysis.

- Ceiling has high level of insulation
- Variable capacity heat pump compliance option (verification details from VCHP Staff report, Appendix B, and RA3)
- Northwest Energy Efficiency Alliance (NEEA) rated heat pump water heater; specific brand/model, or equivalent, must be installed

HERS FEATURE SUMMARY

The following is a summary of the features that must be field-verified by a certified HERS Rater as a condition for meeting the modeled energy performance for this computer analysis. Additional detail is provided in the building tables below. Registered CF2Rs and CF3Rs are required to be completed in the HERS Registry.

- Indoor air quality ventilation
- Kitchen range hood
- Verified Refrigerant Charge
- Airflow in habitable rooms (SC3.1.4.1.7)
- Verified heat pump rated heating capacity
- Wall-mounted thermostat in zones greater than 150 ft2 (SC3.4.5)
- Ductless indoor units located entirely in conditioned space (SC3.1.4.1.8)

BUILDING - FEATURES INFORMATION

01	02	03	04	05	06	07
Project Name	Conditioned Floor Area (ft^2)	Number of Dwelling Units	Number of Bedrooms	Number of Zones	Number of Ventilation Cooling Systems	Number of Water Heating Systems
Carpenteria ADU (Plan 1)	400	1	1	1	0	1

Project Name: Carpenteria ADU (Plan 1) **Calculation Date/Time:** 2023-01-13T11:55:49-08:00 **(Page 7 of 12)**
Calculation Description: Title 24 Analysis **Input File Name:** Carpenteria ADU (Plan 1).ribd22x

ZONE INFORMATION

01	02	03	04	05	06	07
Zone Name	Zone Type	HVAC System Name	Zone Floor Area (ft^2)	Avg. Ceiling Height	Water Heating System 1	Status
Living Area	Conditioned	HVAC System1	400	8	DHW Sys 1	New

OPAQUE SURFACES

01	02	03	04	05	06	07	08
Name	Zone	Construction	Azimuth	Orientation	Gross Area (ft^2)	Window and Door Area (ft2)	Tilt (deg)
Front Wall	Living Area	R-21 Wall	0	Front	160	40	90
Left Wall	Living Area	R-21 Wall	90	Left	160	16	90
Rear Wall	Living Area	R-21 Wall	180	Back	160	20	90
Right Wall	Living Area	R-21 Wall	270	Right	160	9	90
Roof	Living Area	R-38 Roof Attic	n/a	n/a	400	n/a	n/a

ATTIC

01	02	03	04	05	06	07	08
Name	Construction	Type	Roof Rise (x in 12)	Roof Reflectance	Roof Emittance	Radiant Barrier	Cool Roof
Attic Living Area	Attic RoofLiving Area	Ventilated	4	0.1	0.85	Yes	No

FENESTRATION / GLAZING

01	02	03	04	05	06	07	08	09	10	11	12	13	14
Name	Type	Surface	Orientation	Azimuth	Width (ft)	Height (ft)	Mult.	Area (ft^2)	U-factor	U-factor Source	SHGC	SHGC Source	Exterior Shading
1	Window	Front Wall	Front	0			1	20	0.3	NFRC	0.35	NFRC	Bug Screen
2	Window	Left Wall	Left	90			1	8	0.3	NFRC	0.35	NFRC	Bug Screen
3	Window	Left Wall	Left	90			1	8	0.3	NFRC	0.35	NFRC	Bug Screen

These plans are only to be used within City of Carpinteria jurisdiction. By using these standard plans ("ADU Plans") in accordance with the City of Carpinteria's Pre-Approved ADU Construction Plans Program, the User agrees to defend, indemnify, and hold harmless the City of Carpinteria and RRM from any and all claims, liabilities, suits, and demands on account of any injury, damage, or loss to persons or property, including injury or death, or economic losses, arising out of the use of these ADU Plans. The use of these ADU Plans does not eliminate or reduce the user's responsibility to verify any and all information herein.

CARPINTERIA ADU PROTOTYPES
SANTA BARBARA COUNTY, CA
CERTIFICATE OF COMPLIANCE - PLAN 2

DATE
0218/23

SHEET
T24-201

5/11/2023 4:57:56 PM
C:\Users\mjenkins\OneDrive - RRM Design Group\Documents\2727-01 Carpinteria ADU_Public Set_mjenkins.rvt

CERTIFICATE OF COMPLIANCE - RESIDENTIAL PERFORMANCE COMPLIANCE METHOD

Project Name: Carpenteria ADU (Plan 1) **Calculation Date/Time:** 2023-01-13T11:55:49-08:00 **(Page 8 of 12)**
Calculation Description: Title 24 Analysis **Input File Name:** Carpenteria ADU (Plan 1).ribd22x

FENESTRATION / GLAZING

01	02	03	04	05	06	07	08	09	10	11	12	13	14
Name	Type	Surface	Orientation	Azimuth	Width (ft)	Height (ft)	Mult.	Area (ft^2)	U-factor	U-factor Source	SHGC	SHGC Source	Exterior Shading
4	Window	Rear Wall	Back	180			1	20	0.3	NFRC	0.35	NFRC	Bug Screen
5	Window	Right Wall	Right	270			1	9	0.3	NFRC	0.35	NFRC	Bug Screen

OPAQUE DOORS

01	02	03	04
Name	Side of Building	Area (ft^2)	U-factor
Door 10	Front Wall	20	0.2

SLAB FLOORS

01	02	03	04	05	06	07	08
Name	Zone	Area (ft^2)	Perimeter (ft)	Edge Insul. R-value and Depth	Edge Insul. R-value and Depth	Carpeted Fraction	Heated
Slab	Living Area	400	80	none	0	80%	No

OPAQUE SURFACE CONSTRUCTIONS

01	02	03	04	05	06	07	08
Construction Name	Surface Type	Construction Type	Framing	Total Cavity R-value	Interior / Exterior Continuous R-value	U-factor	Assembly Layers
R-21 Wall	Exterior Walls	Wood Framed Wall	2x6 @ 16 in. O. C.	R-21	None / None	0.069	Inside Finish: Gypsum Board Cavity / Frame: R-21 / 2x6 Exterior Finish: 3 Coat Stucco
Attic RoofLiving Area	Attic Roofs	Wood Framed Ceiling	2x4 @ 24 in. O. C.	R-0	None / 0	0.644	Roofing: Light Roof (Asphalt Shingle) Roof Deck: Wood Siding/sheathing/decking Cavity / Frame: no insul. / 2x4

CERTIFICATE OF COMPLIANCE - RESIDENTIAL PERFORMANCE COMPLIANCE METHOD

Project Name: Carpenteria ADU (Plan 1) **Calculation Date/Time:** 2023-01-13T11:55:49-08:00 **(Page 9 of 12)**
Calculation Description: Title 24 Analysis **Input File Name:** Carpenteria ADU (Plan 1).ribd22x

OPAQUE SURFACE CONSTRUCTIONS

01	02	03	04	05	06	07	08
Construction Name	Surface Type	Construction Type	Framing	Total Cavity R-value	Interior / Exterior Continuous R-value	U-factor	Assembly Layers
R-38 Roof Attic	Ceilings (below attic)	Wood Framed Ceiling	2x4 @ 24 in. O. C.	R-38	None / None	0.025	Over Ceiling Joists: R-28.9 insul. Cavity / Frame: R-9.1 / 2x4 Inside Finish: Gypsum Board

BUILDING ENVELOPE - HERS VERIFICATION

01	02	03	04	05
Quality Insulation Installation (QII)	High R-value Spray Foam Insulation	Building Envelope Air Leakage	CFM50	CFM50
Not Required	Not Required	N/A	n/a	n/a

WATER HEATING SYSTEMS

01	02	03	04	05	06	07	08	09
Name	System Type	Distribution Type	Water Heater Name	Number of Units	Solar Heating System	Compact Distribution	HERS Verification	Water Heater Name (#)
DHW Sys 1	Domestic Hot Water (DHW)	Standard	DHW Heater 1	1	n/a	None	n/a	DHW Heater 1 (1)

WATER HEATERS - NEEA HEAT PUMP

01	02	03	04	05	06	07	08
Name	# of Units	Tank Vol. (gal)	NEEA Heat Pump Brand	NEEA Heat Pump Model	Tank Location	Duct Inlet Air Source	Duct Outlet Air Source
DHW Heater 1	1	40	Rheem	RheemHPLD401RH	Living Area	Living Area	Living Area

CERTIFICATE OF COMPLIANCE - RESIDENTIAL PERFORMANCE COMPLIANCE METHOD

Project Name: Carpenteria ADU (Plan 1) **Calculation Date/Time:** 2023-01-13T11:55:49-08:00 **(Page 10 of 12)**
Calculation Description: Title 24 Analysis **Input File Name:** Carpenteria ADU (Plan 1).ribd22x

WATER HEATING - HERS VERIFICATION

01	02	03	04	05	06	07
Name	Pipe Insulation	Parallel Piping	Compact Distribution	Compact Distribution Type	Recirculation Control	Shower Drain Water Heat Recovery
DHW Sys 1 - 1/1	Not Required	Not Required	Not Required	None	Not Required	Not Required

SPACE CONDITIONING SYSTEMS

01	02	03	04	05	06	07	08	09
Name	System Type	Heating Unit Name	Heating Equipment Count	Cooling Unit Name	Cooling Equipment Count	Fan Name	Distribution Name	Required Thermostat Type
HVAC System1	Heat pump heating cooling	Heat Pump System 1	1	Heat Pump System 1	1	n/a	n/a	Setback

HVAC - HEAT PUMPS

01	02	03	04	05	06	07	08	09	10	11	12	13
			Heating				Cooling					
Name	System Type	Number of Units	Efficiency Type	HSPF2 / HSPF2 / COP	Cap 47	Cap 17	Efficiency Type	SEER / SEER2	EER / EER / CEER	Zonally Controlled	Compressor Type	HERS Verification
Heat Pump System 1	VCHP-ductless	1	HSPF	8.8	12000	11400	EERSEER	15	12.2	Not Zonal	Single Speed	Heat Pump System 1-hers-htpump

HVAC HEAT PUMPS - HERS VERIFICATION

01	02	03	04	05	06	07	08	09
Name	Verified Airflow	Airflow Target	Verified EER/EER2	Verified SEER/SEER2	Verified Refrigerant Charge	Verified HSPF/HSPF2	Verified Heating Cap 47	Verified Heating Cap 17
Heat Pump System 1-hers-htpump	Not Required	0	Not Required	Not Required	Yes	No	Yes	Yes

CERTIFICATE OF COMPLIANCE - RESIDENTIAL PERFORMANCE COMPLIANCE METHOD

Project Name: Carpenteria ADU (Plan 1) **Calculation Date/Time:** 2023-01-13T11:55:49-08:00 **(Page 11 of 12)**
Calculation Description: Title 24 Analysis **Input File Name:** Carpenteria ADU (Plan 1).ribd22x

VARIABLE CAPACITY HEAT PUMP COMPLIANCE OPTION - HERS VERIFICATION

01	02	03	04	05	06	07	08	09	10
Name	Certified Low-Static VCHP System	Airflow to Habitable Rooms	Ductless Units in Conditioned Space	Wall Mount Thermostat	Air Filter Sizing & Pressure Drop Rating	Low Leakage Ducts in Conditioned Space	Minimum Airflow per RA3.3 and SC3.3.3.4.1	Certified non-continuous Fan	Indoor Fan not Running Continuously
Heat Pump System 1	Not required	Required	Required	Required	Not required	Not required	Not required	Not required	Not required

INDOOR AIR QUALITY (IAQ) FANS

01	02	03	04	05	06	07	08	09
Dwelling Unit	Airflow (CFM)	Fan Efficacy (W/CFM)	IAQ Fan Type	Includes Heat/Energy Recovery?	IAQ Recovery Effectiveness - SRE	Includes Fault Indicator Display?	HERS Verification	Status
SFam IAQVentRpt	27	0.35	Exhaust	No	n/a	No	Yes	

CERTIFICATE OF COMPLIANCE - RESIDENTIAL PERFORMANCE COMPLIANCE METHOD

Project Name: Carpenteria ADU (Plan 1) **Calculation Date/Time:** 2023-01-13T11:55:49-08:00 **(Page 12 of 12)**
Calculation Description: Title 24 Analysis **Input File Name:** Carpenteria ADU (Plan 1).ribd22x

DOCUMENTATION AUTHOR'S DECLARATION STATEMENT

1. I certify that this Certificate of Compliance documentation is accurate and complete.

Documentation Author Name: Timothy Carstairs	Documentation Author Signature: Timothy Carstairs
Company: Carstairs Energy Inc.	Signature Date: 2023-01-17 09:42:44
Address: 2238 Bayview Heights Drive, Suite E	CEA/ HERS Certification Identification (If applicable): r160610042
City/State/Zip: Los Osos, CA 93402	Phone: 805-904-9048

RESPONSIBLE PERSON'S DECLARATION STATEMENT

I certify the following under penalty of perjury, under the laws of the State of California:

1. I am eligible under Division 3 of the Business and Professions Code to accept responsibility for the building design identified on this Certificate of Compliance.
2. I certify that the energy features and performance specifications identified on this Certificate of Compliance conform to the requirements of Title 24, Part 1 and Part 6 of the California Code of Regulations.
3. The building design features or system design features identified on this Certificate of Compliance are consistent with the information provided on other applicable compliance documents, worksheets, calculations, plans and specifications submitted to the enforcement agency for approval with this building permit application.

Responsible Designer Name: Randy Russom	Responsible Designer Signature:
Company: RRM Design Group	Date Signed: 2023-02-06 08:17:52
Address: 3765 S. Higuera Street, Suite 102	License: na
City/State/Zip: San Luis Obispo, CA 94301	Phone: 805-543-1794

Digitally signed by CalCERTS. This digital signature is provided in order to secure the content of this registered document, and in no way implies Registration Provider responsibility for the accuracy of the information.

Easy to Verify at CalCERTS.com

These plans are only to be used within City of Carpinteria jurisdiction. By using these standard plans ("ADU Plans") in accordance with the City of Carpinteria's Pre-Approved ADU Construction Plans Program, the User agrees to defend, indemnify, and hold harmless the City of Carpinteria and RRM from any and all claims, liabilities, suits, and demands on account of any injury, damage, or loss to persons or property, including injury or death, or economic losses, arising out of the use of these ADU Plans. The use of these ADU Plans does not eliminate or reduce the user's responsibility to verify any and all information herein.

CARPINTERIA ADU PROTOTYPES
SANTA BARBARA COUNTY, CA
CERTIFICATE OF COMPLIANCE - PLAN 2

DATE
0218/23

SHEET
T24-202

5/11/2023 4:57:58 PM
C:\Users\rnjenkins\OneDrive - RRM Design Group\Documents\2727-01 Carpinteria ADU_Public Set_rnjenkins.rvt

ROOM LOAD SUMMARY

Project Name									Date		
Carpenteria ADU (Plan 1)									1/17/2023		
System Name									Floor Area		
HVAC System									400		

ROOM LOAD SUMMARY

			ROOM COOLING PEAK			COIL COOLING PEAK			COIL HTG. PEAK	
Zone Name	Room Name	Mult.	CFM	Sensible	Latent	CFM	Sensible	Latent	CFM	Sensible
Living Area	1st Floor	1	179	3,821	240	179	3,821	240	146	5,767
				PAGE TOTAL		179	3,821	240	146	5,767
				TOTAL *		179	3,821	240	146	5,767

* Total includes ventilation load for zonal systems.

2022 Single-Family Residential Mandatory Requirements Summary

§ 150.0(m)13:	**Space Conditioning System Airflow Rate and Fan Efficacy.** Space conditioning systems that use ducts to supply cooling must have a hole for the placement of a static pressure probe, or a permanently installed static pressure probe in the supply plenum. Airflow must be ≥ 350 CFM per ton of nominal cooling capacity, and an air-handling unit fan efficacy ≤ 0.45 watts per CFM for gas furnace air handlers and ≤ 0.58 watts per CFM for all others. Small duct high velocity systems must provide an airflow ≥ 250 CFM per ton of nominal cooling capacity, and an air-handling unit fan efficacy ≤ 0.62 watts per CFM. Field verification testing is required in accordance with Reference Residential Appendix RA3.3. *

Ventilation and Indoor Air Quality:

§ 150.0(o)1:	**Requirements for Ventilation and Indoor Air Quality.** All dwelling units must meet the requirements of ASHRAE Standard 62.2, Ventilation and Acceptable Indoor Air Quality in Residential Buildings subject to the amendments specified in § 150.0(o)1. *
§ 150.0(o)1B:	**Central Fan Integrated (CFI) Ventilation Systems.** Continuous operation of CFI air handlers is not allowed to provide the whole-dwelling unit ventilation airflow required per §150.0(o)1C. A motorized damper(s) must be installed on the ventilation duct(s) that prevents all airflow through the space conditioning duct system when the damper(s) is closed andcontrolled per §150.0(o)1Biii&iv. CFI ventilation systems must have controls that track outdoor air ventilation run time, and either open or close the motorized damper(s) for compliance with §150.0(o)1C.
§ 150.0(o)1C:	**Whole-Dwelling Unit Mechanical Ventilation for Single-Family Detached and townhouses .** Single-family detached dwelling units, and attached dwelling units not sharing ceilings or floors with other dwelling units, occupiable spaces, public garages, or commercial spaces must have mechanical ventilation airflow specified in § 150.0(o)1Ci-iii.
§ 150.0(o)1G:	**Local Mechanical Exhaust.** Kitchens and bathrooms must have local mechanical exhaust; nonenclosed kitchens must have demand-controlled exhaust system meeting requirements of §150.0(o)1Giii,enclosed kitchens and bathrooms can use demand-controlled or continuous exhaust meeting §150.0(o)1Giii-iv. Airflow must be measured by the installer per §150.0(o)1Gv, and rated for sound per §150.0(o)1Gvi. *
§ 150.0(o)1H&I:	**Airflow Measurement and Sound Ratings of Whole-Dwelling Unit Ventilation Systems.** The airflow required per § 150.0(o)1C must be measured by using a flow hood, flow grid, or other airflow measuring device at the fan's inlet or outlet terminals/grilles per Reference Residential Appendix RA3.7. Whole-Dwelling unit ventilation systems must be rated for sound per ASHRAE 62.2 §7.2 at no less than the minimum airflow rate required by §150.0(o)1C.
§ 150.0(o)2:	**Field Verification and Diagnostic Testing.** Whole-Dwelling Unit ventilation airflow, vented range hood airflow and sound rating, and HRV and ERV fan efficacy must be verified in accordance with Reference Residential Appendix RA3.7. Vented range hoods must be verified per Reference Residential Appendix RA3.7.4.3 to confirm if it is rated by HVI or AHAM to comply with the airflow rates and sound requirements per §150.0(o)1G

Pool and Spa Systems and Equipment:

§ 110.4(a):	**Certification by Manufacturers.** Any pool or spa heating system or equipment must be certified to have all of the following: compliance with the Appliance Efficiency Regulations and listing in MAEDbS; an on-off switch mounted outside of the heater that allows shutting off the heater without adjusting the thermostat setting; a permanent weatherproof plate or card with operating instructions; and must not use electric resistance heating. *
§ 110.4(b)1:	**Piping.** Any pool or spa heating system or equipment must be installed with at least 36 inches of pipe between the filter and the heater, or dedicated suction and return lines, or built-in or built-up connections to allow for future solar heating.
§ 110.4(b)2:	**Covers.** Outdoor pools or spas that have a heat pump or gas heater must have a cover.
§ 110.4(b)3:	**Directional Inlets and Time Switches for Pools.** Pools must have directional inlets that adequately mix the pool water, and a time switch that will allow all pumps to be set or programmed to run only during off-peak electric demand periods.
§ 110.5:	**Pilot Light.** Natural gas pool and spa heaters must not have a continuously burning pilot light.
§ 150.0(p):	**Pool Systems and Equipment Installation.** Residential pool systems or equipment must meet the specified requirements for pump sizing, flow rate, piping, filters, and valves.

Lighting:

§ 110.9:	**Lighting Controls and Components.** All lighting control devices and systems, ballasts, and luminaires must meet the applicable requirements of § 110.9. *
§ 150.0(k)1A:	**Luminaire Efficacy.** All installed luminaires must meet the requirements in Table 150.0-A, except lighting integral to exhaust fans, kitchen range hoods, bath vanity mirrors, and garage door openers; navigation lighting less than 5 watts; and lighting internal to drawers, cabinets, and linen closets with an efficacy of at least 45 lumens per watt.
§ 150.0(k)1B:	**Screw based luminaires.** Screw based luminaires must contain lamps that comply with Reference Joint Appendix JA8. *
§ 150.0(k)1C:	**Recessed Downlight Luminaires in Ceilings.** Luminaires recessed into ceilings must not contain screw based sockets, must be airtight, and must be sealed with a gasket or caulk. California Electrical Code § 410.116 must also be met.
§ 150.0(k)1D:	**Light Sources in Enclosed or Recessed Luminaires.** Lamps and other separable light sources that are not compliant with the JA8 elevated temperature requirements, including marking requirements, must not be installed in enclosed or recessed luminaires.
§ 150.0(k)1E:	**Blank Electrical Boxes.** The number of electrical boxes that are more than five feet above the finished floor and do not contain a luminaire or other device shall be no more than the number of bedrooms. These boxes must be served by a dimmer, vacancy sensor control, low voltage wiring, or fan speed control.
§ 150.0(k)1F:	**Lighting Integral to Exhaust Fans.** Lighting integral to exhaust fans (except when installed by the manufacturer in kitchen exhaust hoods) must meet the applicable requirements of § 150.0(k). *

5/6/22

RESIDENTIAL MEASURES SUMMARY — RMS-1

Project Name	Building Type		Date
Carpenteria ADU (Plan 1)	☑ Single Family ☐ Multi Family	☐ Addition Alone ☐ Existing+ Addition/Alteration	1/17/2023

Project Address	California Energy Climate Zone	Total Cond. Floor Area	Addition	# of Units
Carpenteria	CA Climate Zone 06	400	n/a	1

INSULATION

Construction	Type	Cavity	Area (ft²)	Special Features	Status
Wall	Wood Framed	R 20	555		New
Door	Opaque Door	R-5	20		New
Roof	Wood Framed Attic	R 38	400		New
Slab	Unheated Slab-on-Grade	- no insulation	400	Perim = 80'	New

FENESTRATION — Total Area: 65 — Glazing Percentage: 16.3 % — New/Altered Average U-Factor: 0.30

Orientation	Area(ft²)	U-Fac	SHGC	Overhang	Sidefins	Exterior Shades	Status
Front (N)	20.0	0.300	0.35	none	none	N/A	New
Left (E)	16.0	0.300	0.35	none	none	N/A	New
Rear (S)	20.0	0.300	0.35	none	none	N/A	New
Right (W)	9.0	0.300	0.35	none	none	N/A	New

HVAC SYSTEMS

Qty.	Heating	Min. Eff	Cooling	Min. Eff	Thermostat	Status
1	Electric Heat Pump	8.80 HSPF	Split Heat Pump	15.0 SEER	Setback	New

HVAC DISTRIBUTION

Location	Heating	Cooling	Duct Location	Duct R-Value	Status
HVAC System	Ductless / No Fan	Ductless	n/a	n/a	New

WATER HEATING

Qty.	Type	Gallons	Min. Eff	Distribution	Status
1	Heat Pump	40	3.10	Standard	New

EnergyPro 9.0 by EnergySoft — User Number: 6249 — ID: 23-011314 — Page 15 of 21

2022 Single-Family Residential Mandatory Requirements Summary

§ 150.0(k)1G:	**Screw based luminaires.** Screw based luminaires must contain lamps that comply with Reference Joint Appendix JA8. *
§ 150.0(k)1H:	**Light Sources in Enclosed or Recessed Luminaires.** Lamps and other separable light sources that are not compliant with the JA8 elevated temperature requirements, including marking requirements, must not be installed in enclosed or recessed luminaires.
§ 150.0(k)1I:	**Light Sources in Drawers, Cabinets, and Linen Closets.** Light sources internal to drawers, cabinetry or linen closets are not required to comply with Table 150.0-A or be controlled by vacancy sensors provided that they are rated to consume no more than 5 watts of power, emit no more than 150 lumens, and are equipped with controls that automatically turn the lighting off when the drawer, cabinet or linen closet is closed.
§ 150.0(k)2A:	**Interior Switches and Controls.** All forward phase cut dimmers used with LED light sources must comply with NEMA SSL 7A.
§ 150.0(k)2B:	**Interior Switches and Controls.** Exhaust fans must be controlled separately from lighting systems. *
§ 150.0(k)2A:	**Accessible Controls.** Lighting must have readily accessible wall-mounted controls that allow the lighting to be manually turned on and off. *
§ 150.0(k)2B:	**Multiple Controls.** Controls must not bypass a dimmer, occupant sensor, or vacancy sensor function if the dimmer or sensor is installed to comply with § 150.0(k).
§ 150.0(k)2C:	**Mandatory Requirements.** Lighting controls must comply with the applicable requirements of § 110.9.
§ 150.0(k)2D:	**Energy Management Control Systems.** An energy management control system (EMCS) may be used to comply with dimming, occupancy, and control requirements if it provides the functionality of the specified control per § 110.9 and the physical controls specified in § 150.0(k)2A.
§ 150.0(k)2E:	**Automatic Shutoff Controls.** In bathrooms, garages, laundry rooms, utility rooms and walk-in closets, at least one installed luminaire must be controlled by an occupancy or vacancy sensor providing automatic-off functionality. Lighting inside drawers and cabinets with opaque fronts or doors must have controls that turn the light off when the drawer or door is closed.
§ 150.0(k)2F:	**Dimmers.** Lighting in habitable spaces (e.g., living rooms, dining rooms, kitchens, and bedrooms) must have readily accessible wall-mounted dimming controls that allow the lighting to be manually adjusted up and down. Forward phase cut dimmers controlling LED light sources in these spaces must comply with NEMA SSL 7A.
§ 150.0(k)2K:	**Independent controls.** Integrated lighting of exhaust fans shall be controlled independently from the fans. Lighting under cabinets or shelves, lighting in display cabinets, and switched outlets must be controlled separately from ceiling-installed lighting.
§ 150.0(k)3A:	**Residential Outdoor Lighting.** For single-family residential buildings, outdoor lighting permanently mounted to a residential building, or to other buildings on the same lot, must have a manual on/off switch and either a photocell and motion sensor or automatic time switch control) or an astronomical time clock. An energy management control system that provides the specified control functionality and meets all applicable requirements may be used to meet these requirements.
§ 150.0(k)4:	**Internally illuminated address signs.** Internally illuminated address signs must either comply with § 140.8 or consume no more than 5 watts of power.
§ 150.0(k)5:	**Residential Garages for Eight or More Vehicles.** Lighting for residential parking garages for eight or more vehicles must comply with the applicable requirements for nonresidential garages in §§ 110.9, 130.0, 130.1, 130.4, 140.6, and 141.0.

Solar Readiness:

§ 110.10(a)1:	**Single-family Residences.** Single-family residences located in subdivisions with 10 or more single-family residences and where the application for a tentative subdivision map for the residences has been deemed complete and approved by the enforcement agency, which do not have a photovoltaic system installed, must comply with the requirements of § 110.10(b)-(e).
§110.10(b)1A:	**Minimum Solar Zone Area.** The solar zone must have a minimum total area as described below. The solar zone must comply with access, pathway, smoke ventilation, and spacing requirements as specified in Title 24, Part 9 or other parts of Title 24 or in any requirements adopted by a local jurisdiction. The solar zone total area must be comprised of areas that have no dimension less than 5 feet and are no less than 80 square feet each for buildings with roof areas less than or equal to 10,000 square feet or no less than 160 square feet each for buildings with roof areas greater than 10,000 square feet. For single-family residences, the solar zone must be located on the roof or overhang of the building and have a total area no less than 250 square feet. *
§ 110.10(b)2:	**Azimuth.** All sections of the solar zone located on steep-sloped roofs must have an azimuth between 90-300° of true north.
§ 110.10(b)3A:	**Shading.** The solar zone must not contain any obstructions, including but not limited to: vents, chimneys, architectural features, and roof mounted equipment. *
§ 110.10(b)3B:	**Shading.** Any obstruction located on the roof or any other part of the building that projects above a solar zone must be located at least twice the horizontal distance of the height difference between the highest point of the obstruction and the horizontal projection of the nearest point of the solar zone, measured in the vertical plane. *
§ 110.10(b)4:	**Structural Design Loads on Construction Documents.** For areas of the roof designated as a solar zone, the structural design loads for roof dead load and roof live load must be clearly indicated on the construction documents.
§ 110.10(c):	**Interconnection Pathways.** The construction documents must indicate: a location reserved for inverters and metering equipment and a pathway reserved for routing of conduit from the solar zone to the point of interconnection with the electrical service; and for single-family residences and central water-heating systems, a pathway reserved for routing plumbing from the solar zone to the water-heating system.
§ 110.10(d):	**Documentation.** A copy of the construction documents or a comparable document indicating the information from § 110.10(b)-(c) must be provided to the occupant.
§ 110.10(e)1:	**Main Electrical Service Panel.** The main electrical service panel must have a minimum busbar rating of 200 amps.
§ 110.10(e)2:	**Main Electrical Service Panel.** The main electrical service panel must have a reserved space to allow for the installation of a double pole circuit breaker for a future solar electric installation. The reserved space must be permanently marked as "For Future Solar Electric."

Electric and Energy Storage Ready:

5/6/22

2022 Single-Family Residential Mandatory Requirements Summary

NOTE: Single-family residential buildings subject to the Energy Codes must comply with all applicable mandatory measures, regardless of the compliance approach used. Review the respective section for more information. (04/2022)

Building Envelope:

§ 110.6(a)1:	**Air Leakage.** Manufactured fenestration, exterior doors, and exterior pet doors must limit air leakage to 0.3 CFM per square foot or less when tested per NFRC-400, ASTM E283, or AAMA/WDMA/CSA 101/I.S.2/A440-2011. *
§ 110.6(a)5:	**Labeling.** Fenestration products and exterior doors must have a label meeting the requirements of § 10-111(a).
§ 110.6(b):	**Field fabricated exterior doors and fenestration** products must use U-factors and solar heat gain coefficient (SHGC) values from Tables 110.6-A, 110.6-B, or JA4.5 for exterior doors. They must be caulked and/or weather-stripped. *
§ 110.7:	**Air Leakage.** All joints, penetrations, and other openings in the building envelope that are potential sources of air leakage must be caulked, gasketed, or weather stripped.
§ 110.8(a):	**Insulation Certification by Manufacturers.** Insulation must be certified by the Department of Consumer Affairs, Bureau of Household Goods and Services (BHGS).
§ 110.8(g):	**Insulation Requirements for Heated Slab Floors.** Heated slab floors must be insulated per the requirements of § 110.8(g).
§ 110.8(i):	**Roofing Products Solar Reflectance and Thermal Emittance.** The thermal emittance and aged solar reflectance values of the roofing material must meet the requirements of § 110.8(i) and be labeled per §10-113 when the installation of a cool roof is specified on the CF1R.
§ 110.8(j):	**Radiant Barrier.** When required, radiant barriers must have an emittance of 0.05 or less and be certified to the Department of Consumer Affairs.
§ 150.0(a):	**Roof Deck, Ceiling and Rafter Roof Insulation.** Roof decks in newly constructed attics in climate zones 4 and 8-16 area-weighted average U-factor not exceeding U-0.184. Ceiling and rafter roofs minimum R-22 insulation in wood-frame ceiling; or area-weighted average U-factor must not exceed 0.043. Rafter roof alterations minimum R-19 or area-weighted average U-factor of 0.054 or less. Attic access doors must have permanently attached insulation using adhesive or mechanical fasteners. The attic access must be gasketed to prevent air leakage. Insulation must be installed in direct contact with a roof or ceiling which is sealed to limit infiltration and exfiltration as specified in § 110.7, including but not limited to placing insulation either above or below the roof deck or on top of a drywall ceiling. *
§ 150.0(b):	**Loose-fill Insulation.** Loose fill insulation must meet the manufacturer's required density for the labeled R-value.
§ 150.0(c):	**Wall Insulation.** Minimum R-13 insulation in 2x4 inch wood framing wall or have a U-factor of 0.102 or less, or R-20 in 2x6 inch wood framing or have a U-factor of 0.071 or less. Opaque non-framed assemblies must have an overall assembly U-factor not exceeding 0.102. Masonry walls must meet Tables 150.1-A or B. *
§ 150.0(d):	**Raised-floor Insulation.** Minimum R-19 insulation in raised wood framed floor or 0.037 maximum U-factor. *
§ 150.0(f):	**Slab Edge Insulation.** Slab edge insulation must meet all of the following: have a water absorption rate, for the insulation material alone without facings, no greater than 0.3 percent; have a water vapor permeance no greater than 2.0 perm per inch; be protected from physical damage and UV light deterioration; and, when installed as part of a heated slab floor, meet the requirements of § 110.8(g).
§ 150.0(g)1:	**Vapor Retarder.** In climate zones 1 through 16, the earth floor of unvented crawl space must be covered with a Class I or Class II vapor retarder. This requirement also applies to controlled ventilation crawl space for buildings complying with the exception to §150.0(d).
§ 150.0(g)2:	**Vapor Retarder.** In climate zones 14 and 16, a Class I or Class II vapor retarder must be installed on the conditioned space side of all insulation in all exterior walls, vented attics, and unvented attics with air-permeable insulation.
§ 150.0(q):	**Fenestration Products.** Fenestration, including skylights, separating conditioned space from unconditioned space or outdoors must have a maximum U-factor of 0.45; or area-weighted average U-factor of all fenestration must not exceed 0.45. *

Fireplaces, Decorative Gas Appliances, and Gas Log:

§ 110.5(e)	**Pilot Light.** Continuously burning pilot lights are not allowed for indoor and outdoor fireplaces.
§ 150.0(e)1:	**Closable Doors.** Masonry or factory-built fireplaces must have a closable metal or glass door covering the entire opening of the firebox.
§ 150.0(e)2:	**Combustion Intake.** Masonry or factory-built fireplaces must have a combustion outside air intake, which is at least six square inches in area and is equipped with a readily accessible, operable, and tight-fitting damper or combustion-air control device.
§ 150.0(e)3:	**Flue Damper.** Masonry or factory-built fireplaces must have a flue damper with a readily accessible control. *

Space Conditioning, Water Heating, and Plumbing System:

§ 110.0-§ 110.3:	**Certification.** Heating, ventilation, and air conditioning (HVAC) equipment, water heaters, showerheads, faucets, and all other regulated appliances must be certified by the manufacturer to the California Energy Commission. *
§ 110.2(a):	**HVAC Efficiency.** Equipment must meet the applicable efficiency requirements in Table 110.2-A through Table 110.2-N. *
§ 110.2(b):	**Controls for Heat Pumps with Supplementary Electric Resistance Heaters.** Heat pumps with supplementary electric resistance heaters must have controls that prevent supplementary heater operation when the heating load can be met by the heat pump alone; and in which the cut-on temperature for compression heating is higher than the cut-on temperature for supplementary heating, and the cut-off temperature for compression heating is higher than the cut-off temperature for supplementary heating. *
§ 110.2(c):	**Thermostats.** All heating or cooling systems not controlled by a central energy management control system (EMCS) must have a setback thermostat. *
§ 110.3(c)3:	**Insulation.** Unfired service water heater storage tanks and solar water-heating backup tanks must have adequate insulation, or tank surface heat loss rating.
§ 110.3(c)6:	**Isolation Valves.** Instantaneous water heaters with an input rating greater than 6.8 kBtu per hour (2 kW) must have isolation valves with hose bibbs or other fittings on both cold and hot water lines to allow for flushing the water heater when the valves are closed.

5/6/22

2022 Single-Family Residential Mandatory Requirements Summary

§ 150.0(s)	**Energy Storage System (ESS) Ready.** All single-family residences must meet all of the following: Either ESS-ready interconnection equipment with backed up capacity of 60 amps or more and four or more ESS supplied branch circuits, or a dedicated raceway from the main service to a subpanel that supplies the branch circuits in § 150.0(s); at least four branch circuits must be identified and have their source collocated at a single panelboard suitable to be supplied by the ESS, with one circuit supplying the refrigerator, one lighting circuit near the primary exit, and one circuit supplying a sleeping room receptacle outlet; main panelboard must have a minimum busbar rating of 225 amps; sufficient space must be reserved to allow future installation of a system isolation equipment/transfer switch within 3' of the main panelboard, with raceways installed between the panelboard and the switch location to allow the connection of backup power source.
§ 150.0(t)	**Heat Pump Space Heater Ready.** Systems using gas or propane furnaces to serve individual dwelling units must include: A dedicated unobstructed 240V branch circuit wiring installed within 3' of the furnace with circuit conductors rated at least 30 amps with the blank cover identified as "240V ready;" and a reserved main electrical service panel space to allow for the installation of a double pole circuit breaker permanently marked as "For Future 240V use."
§ 150.0(u)	**Electric Cooktop Ready.** Systems using gas or propane cooktop to serve individual dwelling units must include: A dedicated unobstructed 240V branch circuit wiring installed within 3' of the cooktop with circuit conductors rated at least 50 amps with the blank cover identified as "240V ready;" and a reserved main electrical service panel space to allow for the installation of a double pole circuit breaker permanently marked as "For Future 240V use."
§ 150.0(v)	**Electric Clothes Dryer Ready.** Clothes dryer locations with gas or propane plumbing to serve individual dwelling units must include: A dedicated unobstructed 240V branch circuit wiring installed within 3' of the dryer location with circuit conductors rated at least 30 amps with the blank cover identified as "240V ready;" and a reserved main electrical service panel space to allow for the installation of a double pole circuit breaker permanently marked as "For Future 240V use."

*Exceptions may apply.

5/6/22

2022 Single-Family Residential Mandatory Requirements Summary

§ 110.5:	**Pilot Lights.** Continuously burning pilot lights are prohibited for natural gas: fan-type central furnaces; household cooking appliances (except appliances without an electrical supply voltage connection with pilot lights that consume less than 150 Btu per hour); and pool and spa heaters. *
§ 150.0(h)1:	**Building Cooling and Heating Loads.** Heating and/or cooling loads are calculated in accordance with the ASHRAE Handbook, Equipment Volume, Applications Volume, and Fundamentals Volume; the SMACNA Residential Comfort System Installation Standards Manual; or the ACCA Manual J using design conditions specified in § 150.0(h)2.
§ 150.0(h)3A:	**Clearances.** Air conditioner and heat pump outdoor condensing units must have a clearance of at least five feet from the outlet of any dryer.
§ 150.0(h)3B:	**Liquid Line Drier.** Air conditioners and heat pump systems must be equipped with liquid line filter driers if required, as specified by the manufacturer's instructions.
§ 150.0(j)1:	**Water Piping, Solar Water-heating System Piping, and Space Conditioning System Line Insulation.** All domestic hot water piping must be insulated as specified in § 609.11 of the California Plumbing Code. *
§ 150.0(j)2:	**Insulation Protection.** Piping insulation must be protected from damage, including that due to sunlight, moisture, equipment maintenance, and wind as required by §120.3(b). Insulation exposed to weather must be water retardant and protected from UV light (no adhesive tapes). Insulation covering chilled water piping and refrigerant suction piping located outside the conditioned space must include, or be protected by, a Class I or Class II vapor retarder. Pipe insulation buried below grade must be installed in a waterproof and non-crushable casing or sleeve.
§ 150.0(n)1:	**Gas or Propane Water Heating Systems.** Systems using gas or propane water heaters to serve individual dwelling units must designate a space at least 2.5' x 2.5' x 7' suitable for the future installation of a heat pump water heater, and meet electrical and plumbing requirements, based on the distance between this designated space and the water heater location; and a condensate drain no more than 2" higher than the base of the water heater
§ 150.0(n)3:	**Solar Water-heating Systems.** Solar water-heating systems and collectors must be certified and rated by the Solar Rating and Certification Corporation (SRCC), the International Association of Plumbing and Mechanical Officials, Research and Testing (IAPMO R&T), or by a listing agency that is approved by the executive director.

Ducts and Fans:

§ 110.8(d)3:	**Ducts.** Insulation installed on an existing space-conditioning duct must comply with § 604.0 of the California Mechanical Code (CMC). If a contractor installs the insulation, the contractor must certify to the customer, in writing, that the insulation meets this requirement.
§ 150.0(m)1:	**CMC Compliance.** All air-distribution system ducts and plenums must meet CMC §§ 601.0-605.0 and ANSI/SMACNA-006-2006 HVAC Duct Construction Standards Metal and Flexible 3rd Edition. Portions of supply-air and return-air ducts and plenums must be insulated to R-6.0 or higher; ducts located entirely in conditioned space as confirmed through field verification and diagnostic testing (RA3.1.4.3.8) do not require insulation. Connections of metal ducts and inner core of flexible ducts must be mechanically fastened. Openings must be sealed with mastic, tape, or other duct-closure system that meets the applicable UL requirements, or aerosol sealant that meets UL 723. The combination of mastic and either mesh or tape must be used to seal openings greater than ¼". If mastic or tape is used. Building cavities, air handler support platforms, and plenums designed or constructed with materials other than sealed sheet metal, duct board or flexible duct must not be used to convey conditioned air. Building cavities and support platforms may contain ducts; ducts installed in these spaces must not be compressed. *
§ 150.0(m)2:	**Factory-Fabricated Duct Systems.** Factory-fabricated duct systems must comply with applicable requirements for duct construction, connections, and closures; joints and seams of duct systems and their components must not be sealed with cloth back rubber adhesive duct tapes unless such tape is used in combination with mastic and draw bands.
§ 150.0(m)3:	**Field-Fabricated Duct Systems.** Field-fabricated duct systems must comply with applicable requirements for: pressure-sensitive tapes, mastics, sealants, and other requirements specified for duct construction.
§ 150.0(m)7:	**Backdraft Damper.** Fan systems that exchange air between the conditioned space and outdoors must have backdraft or automatic dampers.
§ 150.0(m)8:	**Gravity Ventilation Dampers.** Gravity ventilating systems serving conditioned space must have either automatic or readily accessible, manually operated dampers in all openings to the outside, except combustion inlet and outlet air openings and elevator shaft vents.
§ 150.0(m)9:	**Protection of Insulation.** Insulation must be protected from damage due tosunlight, moisture, equipment maintenance, and wind. Insulation exposed to weather must be suitable for outdoor service (e.g., protected by aluminum, sheet metal, painted canvas, or plastic cover). Cellular foam insulation must be protected as above or painted with a water retardant and solar radiation-resistant coating.
§ 150.0(m)10:	**Porous Inner Core Flex Duct.** Porous inner cores of flex ducts must have a non-porous layer or air barrier between the inner core and outer vapor barrier.
§ 150.0(m)11:	**Duct System Sealing and Leakage Test.** When space conditioning systems use forced air duct systems to supply conditioned air to an occupiable space, the ducts must be sealed and duct leakage tested, as confirmed through field verification and diagnostic testing, in accordance with Reference Residential Appendix RA3.1.
§ 150.0(m)12:	**Air Filtration.** Space conditioning systems with ducts exceeding 10 feet and the supply side of ventilation systems must have MERV 13 or equivalent filters. Filters for space conditioning systems must have a two inch depth or can be one inch if sized per Equation 150.0-A. Clean-filter pressure drop and labeling must meet the requirements in §150.0(m)12. Filters must be accessible for regular service. Filter racks or grilles must use gaskets, sealing, or other means to close gaps around the inserted filters to and prevents air from bypassing the filter. *

5/6/22

These plans are only to be used within City of Carpinteria jurisdiction. By using these standard plans ("ADU Plans") in accordance with the City of Carpinteria's Pre-Approved ADU Construction Plans Program, the User agrees to defend, indemnify, and hold harmless the City of Carpinteria and RRM from any and all claims, liabilities, suits, and demands on account of any injury, damage, or loss to persons or property, including injury or death, or economic losses, arising out of the use of these ADU Plans. The use of these ADU Plans does not eliminate or reduce the user's responsibility to verify any and all information herein.

CARPINTERIA ADU PROTOTYPES

SANTA BARBARA COUNTY, CA

CERTIFICATE OF COMPLIANCE - PLAN 2

DATE 0218/23

SHEET T24-203